Asentamientos Inmediatos (Si)

DATOS DE ENTRADA			
Carga Columna (ton)	28.02	Df (m)	1.00
q (ton/m²)	16.58	10% q (ton/r	1.66
B (m)	1.30	b (m)	0.65
L (m)	1.30	l (m)	0.65

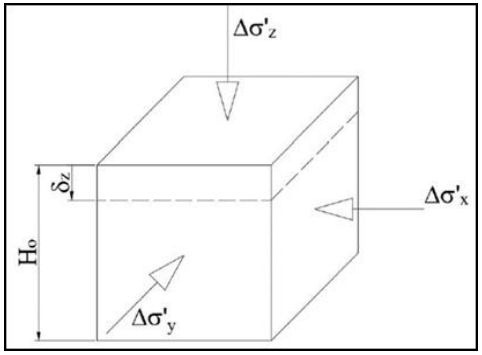

Z (Total)	Z (Relativo)	R_1 (m)	R_2 (m)	R_3 (m)	Δs_z (ton/m²)	Δs_x (ton/m²)
1.01	0.01	0.650	0.650	0.919	16.58	4.059
1.13	0.13	0.663	0.663	0.928	16.49	3.056
1.26	0.26	0.700	0.700	0.955	15.93	2.124
1.39	0.39	0.758	0.758	0.999	14.78	1.422
1.52	0.52	0.832	0.832	1.056	13.26	0.938
1.65	0.65	0.919	0.919	1.126	11.62	0.620
1.78	0.78	1.015	1.015	1.206	10.06	0.415
1.91	0.91	1.118	1.118	1.293	8.66	0.282
2.04	1.04	1.226	1.226	1.388	7.45	0.196
2.17	1.17	1.338	1.338	1.488	6.43	0.139
2.30	1.30	1.453	1.453	1.592	5.57	0.100
2.43	1.43	1.571	1.571	1.700	4.86	0.074
2.56	1.56	1.690	1.690	1.811	4.26	0.055
2.69	1.69	1.811	1.811	1.924	3.75	0.042
2.82	1.82	1.933	1.933	2.039	3.33	0.033
2.95	1.95	2.055	2.055	2.156	2.97	0.026
3.08	2.08	2.179	2.179	2.274	2.66	0.020

$$\Delta\sigma_Z = q_0 \frac{1}{2\pi}\left[\tan^{-1}\frac{\ell \cdot b}{z \cdot R_3} + \frac{\ell \cdot b \cdot z}{R_3}\left(\frac{1}{R_1^{\,2}} + \frac{1}{R_2^{\,2}}\right)\right]$$

$$\delta_z = \varepsilon_z * H_0$$

Dónde:

$\Delta\sigma_Z$ = Incremento de esfuerzo (ton/m²).

q_0 = Carga uniformemente distribuida (ton/m²).

$R_1 = \left(\ell^2 + z^2\right)^{1/2}$

$R_2 = \left(b^2 + z^2\right)^{1/2}$

$R_3 = \left(\ell^2 + b^2 + z^2\right)^{1/2}$

Z = Profundidad (m).

b y ℓ corresponden al ancho (m) y largo de la superficie cargada (m).

Profundidad						Incrementos de Esfuerzos		Asentamientos	
Inicial [m]	Final [m]	Media [m]	Espesor [m]	E (ton/m²)	υ	Δs'v (ton/m²)	Δs'h (ton/m²)	ε	Si (m)
0.00	0.50	0.25	0.50	1016.00	0.50	21.08	3.46	0.017345	0.0087
0.50	1.00	0.75	0.50	1016.00	0.50	14.32	0.72	0.013386	0.0067
1.00	1.50	1.25	0.50	920.00	0.50	7.98	0.16	0.008492	0.00425
1.50	2.00	1.75	0.50	920.00	0.50	4.70	0.05	0.005059	0.00253
2.00	2.50	2.25	0.50	1223.00	0.40	6.46	0.14	0.005186	0.0026
2.50	3.00	2.75	0.50	1223.00	0.40	4.88	0.08	0.003939	0.0020
								Si (m)=	0.02670

Asentamientos por Consolidación (Sc)

DATOS DE ENTRADA			
Espesor del Estrato Compresible (m)			100.00
Carga Columna (ton)	28.02	Df (m)	1.00
q (ton/m²)	16.58	10% q (ton/m²)	1.66
B (m)	1.30	b (m)	0.65
L (m)	1.30	l (m)	0.65

Z (Total)	Z (Relativo)	R_1 (m)	R_2 (m)	R_3 (m)	Δs_z (ton/m²)
1.01	0.01	0.650	0.650	0.919	4.15
1.13	0.13	0.663	0.663	0.928	4.12
1.26	0.26	0.700	0.700	0.955	3.98
1.39	0.39	0.758	0.758	0.999	3.70
1.52	0.52	0.832	0.832	1.056	3.32
1.65	0.65	0.919	0.919	1.126	2.91
1.78	0.78	1.015	1.015	1.206	2.51
1.91	0.91	1.118	1.118	1.293	2.16
2.04	1.04	1.226	1.226	1.388	1.86
2.17	1.17	1.338	1.338	1.488	1.61
2.30	1.30	1.453	1.453	1.592	1.39
2.43	1.43	1.571	1.571	1.700	1.21
2.56	1.56	1.690	1.690	1.811	1.06
2.69	1.69	1.811	1.811	1.924	0.94
2.82	1.82	1.933	1.933	2.039	0.83
2.95	1.95	2.055	2.055	2.156	0.74
3.08	2.08	2.179	2.179	2.274	0.66

INCREMENTO DE ESFUERZO HOLL (1940)

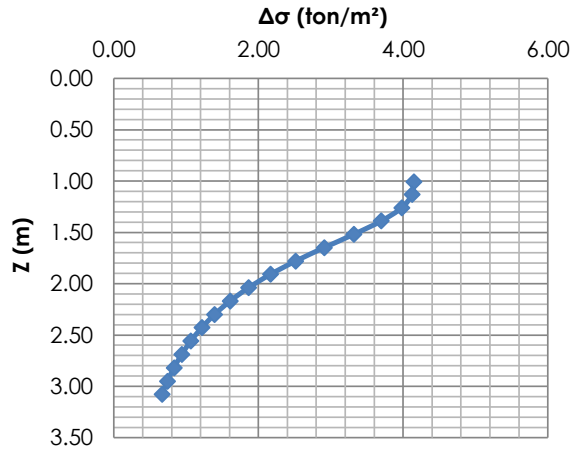

cv (cm²/min)	0.87
U %	0.50
Tv	0.00002
t (días)	0.04
t (años)	0.0001

γw(ton/m^3)	1.00	s'p (ton/m^2) =	2.48	Cr=	0.0357
		eo=	1.08	Cc=	0.1638

Profundidad			Esfuerzos						Asentamientos		
Inicial [m]	Final [m]	Media [m]	γ (ton/m^3)	sv (ton/m^2)	μw (ton/m^2)	s'v (ton/m^2)	Δs'v (ton/m^2)	$s'_v + \Delta s'_v$ (ton/m^2)	Relación de consolidación del suelo (RSC)		Sc (m)
0.00	0.50	0.25	1.73	0.43	0.00	0.43	4.10	4.53	SSC	5.73	0.0168
0.50	1.00	0.75	1.73	1.30	0.00	1.30	3.68	4.98	SSC	1.91	0.0143
1.00	1.50	1.25	1.71	2.14	0.00	2.14	3.58	5.72	SC	1.16	0.0037
1.50	2.00	1.75	1.71	2.99	0.00	2.99	1.99	4.99	SC	0.83	0.0019
2.00	2.50	2.25	1.97	4.43	0.00	4.43	0.94	5.37	SC	0.56	0.0007
2.50	3.00	2.75	1.97	5.42	0.00	5.42	0.74	6.16	SC	0.46	0.0005
										Sc (m)=	0.021102
										Sc (m) 100 años=	0.000106

Asentamientos Inmediatos (Si)

DATOS DE ENTRADA			
Carga Columna (ton)	20.776	Df (m)	1.00
q (ton/m²)	17.17	10% q (ton/m²)	1.72
B (m)	1.10	b (m)	0.55
L (m)	1.10	l (m)	0.55

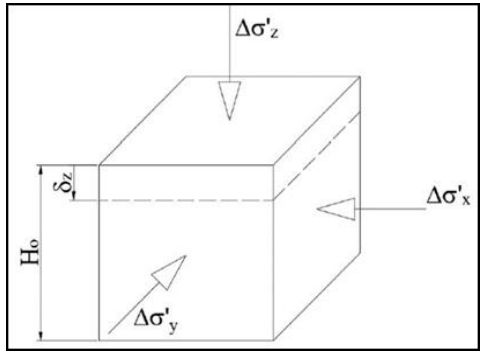

Z (Total)	Z (Relativo)	R_1 (m)	R_2 (m)	R_3 (m)	Δs_z (ton/m²)	Δs_x (ton/m²)
1.01	0.01	0.550	0.550	0.778	17.17	4.187
1.13	0.13	0.565	0.565	0.789	17.01	2.973
1.26	0.26	0.608	0.608	0.820	16.12	1.907
1.39	0.39	0.674	0.674	0.870	14.48	1.175
1.52	0.52	0.757	0.757	0.936	12.50	0.718
1.65	0.65	0.851	0.851	1.014	10.55	0.445
1.78	0.78	0.954	0.954	1.102	8.84	0.282
1.91	0.91	1.063	1.063	1.197	7.41	0.184
2.04	1.04	1.176	1.176	1.299	6.23	0.124
2.17	1.17	1.293	1.293	1.405	5.28	0.085
2.30	1.30	1.412	1.412	1.515	4.51	0.060
2.43	1.43	1.532	1.532	1.628	3.89	0.044
2.56	1.56	1.654	1.654	1.743	3.37	0.032
2.69	1.69	1.777	1.777	1.860	2.95	0.024
2.82	1.82	1.901	1.901	1.979	2.60	0.019
2.95	1.95	2.026	2.026	2.099	2.30	0.015
3.08	2.08	2.151	2.151	2.221	2.05	0.011

$$\Delta\sigma_Z = q_0 \frac{1}{2\pi}\left[\tan^{-1}\frac{\ell \cdot b}{z \cdot R_3} + \frac{\ell \cdot b \cdot z}{R_3}\left(\frac{1}{R_1^{\,2}} + \frac{1}{R_2^{\,2}}\right)\right]$$

$$\delta_z = \varepsilon_z * H_0$$

Dónde:

$\Delta\sigma_Z$ = Incremento de esfuerzo (ton/m²).

q_0 = Carga uniformemente distribuida (ton/m²).

$R_1 = \left(\ell^2 + z^2\right)^{1/2}$

$R_2 = \left(b^2 + z^2\right)^{1/2}$

$R_3 = \left(\ell^2 + b^2 + z^2\right)^{1/2}$

Z = Profundidad (m).

b y ℓ corresponden al ancho (m) y largo de la superficie cargada (m).

Profundidad						Incrementos de Esfuerzos		Asentamientos	
Inicial [m]	Final [m]	Media [m]	Espesor [m]	E (ton/m²)	υ	Δs'v (ton/m²)	Δs'h (ton/m²)	ε	Si (m)
0.00	0.50	0.25	0.50	1016.00	0.50	21.39	3.31	0.017788	0.0089
0.50	1.00	0.75	0.50	1016.00	0.50	12.87	0.51	0.012157	0.0061
1.00	1.50	1.25	0.50	920.00	0.50	6.52	0.10	0.006983	0.00349
1.50	2.00	1.75	0.50	920.00	0.50	3.69	0.03	0.003977	0.00199
2.00	2.50	2.25	0.50	1223.00	0.40	5.31	0.09	0.004288	0.0021
2.50	3.00	2.75	0.50	1223.00	0.40	3.91	0.04	0.003165	0.0016
								Si (m)=	0.02418

Asentamientos por Consolidación (Sc)

DATOS DE ENTRADA			
Espesor del Estrato Compresible (m)			100.00
Carga Columna (ton)	20.776	Df (m)	1.00
q (ton/m²)	17.17	10% q (ton/m²)	1.72
B (m)	1.10	b (m)	0.55
L (m)	1.10	l (m)	0.55

Z (Total)	Z (Relativo)	R_1 (m)	R_2 (m)	R_3 (m)	Δs_z (ton/m²)
1.01	0.01	0.550	0.550	0.778	4.29
1.13	0.13	0.565	0.565	0.789	4.25
1.26	0.26	0.608	0.608	0.820	4.03
1.39	0.39	0.674	0.674	0.870	3.62
1.52	0.52	0.757	0.757	0.936	3.12
1.65	0.65	0.851	0.851	1.014	2.64
1.78	0.78	0.954	0.954	1.102	2.21
1.91	0.91	1.063	1.063	1.197	1.85
2.04	1.04	1.176	1.176	1.299	1.56
2.17	1.17	1.293	1.293	1.405	1.32
2.30	1.30	1.412	1.412	1.515	1.13
2.43	1.43	1.532	1.532	1.628	0.97
2.56	1.56	1.654	1.654	1.743	0.84
2.69	1.69	1.777	1.777	1.860	0.74
2.82	1.82	1.901	1.901	1.979	0.65
2.95	1.95	2.026	2.026	2.099	0.58
3.08	2.08	2.151	2.151	2.221	0.51

INCREMENTO DE ESFUERZO HOLL (1940)

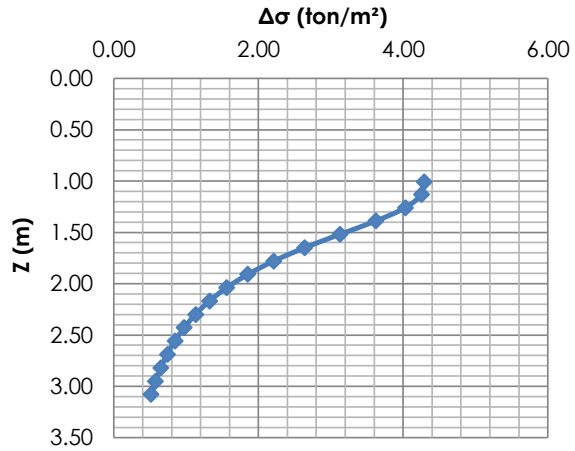

cv (cm²/min)	0.87
U %	0.50
Tv	0.00002
t (días)	0.04
t (años)	0.0001

γw(ton/m^3)	1.00	s'p (ton/m^2) =	2.48	Cr=	0.0357
		eo=	1.08	Cc=	0.1638

Profundidad			Esfuerzos						Asentamientos		
Inicial [m]	Final [m]	Media [m]	γ (ton/m^3)	sv (ton/m^2)	μw (ton/m^2)	s'v (ton/m^2)	Δs'v (ton/m^2)	$s'_v + \Delta s'_v$ (ton/m^2)	Relación de consolidación del suelo (RSC)		Sc (m)
0.00	0.50	0.25	1.73	0.43	0.00	0.43	4.22	4.66	SSC	5.73	0.0173
0.50	1.00	0.75	1.73	1.30	0.00	1.30	3.61	4.90	SSC	1.91	0.0141
1.00	1.50	1.25	1.71	2.14	0.00	2.14	3.22	5.35	SC	1.16	0.0034
1.50	2.00	1.75	1.71	2.99	0.00	2.99	1.63	4.62	SC	0.83	0.0016
2.00	2.50	2.25	1.97	4.43	0.00	4.43	0.74	5.17	SC	0.56	0.0006
2.50	3.00	2.75	1.97	5.42	0.00	5.42	0.58	6.00	SC	0.46	0.0004
										Sc (m)=	0.020074
										Sc (m) 100 años=	0.000100

Asentamientos Inmediatos (Si)

DATOS DE ENTRADA			
Carga Columna (ton)	24.27	Df (m)	1.00
q (ton/m²)	16.85	10% q (ton/m²)	1.69
B (m)	1.20	b (m)	0.60
L (m)	1.20	l (m)	0.60

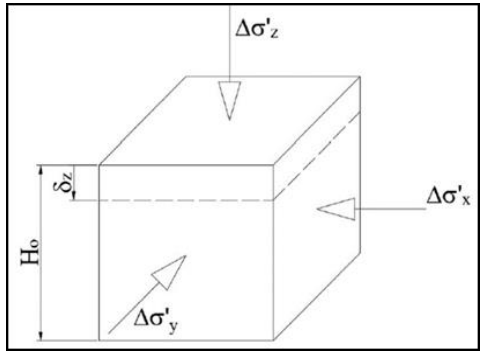

Z (Total)	Z (Relativo)	R_1 (m)	R_2 (m)	R_3 (m)	Δs_z (ton/m²)	Δs_x (ton/m²)
1.01	0.01	0.600	0.600	0.849	16.85	4.118
1.13	0.13	0.614	0.614	0.858	16.73	3.019
1.26	0.26	0.654	0.654	0.887	16.03	2.023
1.39	0.39	0.716	0.716	0.934	14.66	1.303
1.52	0.52	0.794	0.794	0.995	12.92	0.830
1.65	0.65	0.885	0.885	1.069	11.13	0.532
1.78	0.78	0.984	0.984	1.153	9.48	0.347
1.91	0.91	1.090	1.090	1.244	8.06	0.231
2.04	1.04	1.201	1.201	1.342	6.86	0.158
2.17	1.17	1.315	1.315	1.445	5.87	0.110
2.30	1.30	1.432	1.432	1.552	5.05	0.079
2.43	1.43	1.551	1.551	1.663	4.37	0.058
2.56	1.56	1.671	1.671	1.776	3.82	0.043
2.69	1.69	1.793	1.793	1.891	3.35	0.033
2.82	1.82	1.916	1.916	2.008	2.96	0.025
2.95	1.95	2.040	2.040	2.127	2.63	0.020
3.08	2.08	2.165	2.165	2.246	2.35	0.015

$$\Delta\sigma_Z = q_0 \frac{1}{2\pi}\left[\tan^{-1}\frac{\ell \cdot b}{z \cdot R_3} + \frac{\ell \cdot b \cdot z}{R_3}\left(\frac{1}{R_1^{\,2}} + \frac{1}{R_2^{\,2}}\right)\right]$$

$$\delta_z = \varepsilon_z * H_0$$

Dónde:

$\Delta\sigma_Z$ = Incremento de esfuerzo (ton/m²).

q_0 = Carga uniformemente distribuida (ton/m²).

$R_1 = \left(\ell^2 + z^2\right)^{1/2}$

$R_2 = \left(b^2 + z^2\right)^{1/2}$

$R_3 = \left(\ell^2 + b^2 + z^2\right)^{1/2}$

Z = Profundidad (m).

b y ℓ corresponden al ancho (m) y largo de la superficie cargada (m).

Profundidad						Incrementos de Esfuerzos		Asentamientos	
Inicial [m]	Final [m]	Media [m]	Espesor [m]	E (ton/m²)	υ	Δs'v (ton/m²)	Δs'h (ton/m²)	ε	Si (m)
0.00	0.50	0.25	0.50	1016.00	0.50	21.23	3.39	0.017559	0.0088
0.50	1.00	0.75	0.50	1016.00	0.50	13.64	0.62	0.012821	0.0064
1.00	1.50	1.25	0.50	920.00	0.50	7.26	0.13	0.007751	0.00388
1.50	2.00	1.75	0.50	920.00	0.50	4.19	0.04	0.004515	0.00226
2.00	2.50	2.25	0.50	1223.00	0.40	5.90	0.11	0.004747	0.0024
2.50	3.00	2.75	0.50	1223.00	0.40	4.39	0.06	0.003554	0.0018
								Si (m)=	0.02547

Asentamientos por Consolidación (Sc)

DATOS DE ENTRADA			
Espesor del Estrato Compresible (m)			100.00
Carga Columna (ton)	24.27	Df (m)	1.00
q (ton/m²)	16.85	10% q (ton/m²)	1.69
B (m)	1.20	b (m)	0.60
L (m)	1.20	l (m)	0.60

Z (Total)	Z (Relativo)	R_1 (m)	R_2 (m)	R_3 (m)	Δs_z (ton/m²)
1.01	0.01	0.600	0.600	0.849	4.21
1.13	0.13	0.614	0.614	0.858	4.18
1.26	0.26	0.654	0.654	0.887	4.01
1.39	0.39	0.716	0.716	0.934	3.67
1.52	0.52	0.794	0.794	0.995	3.23
1.65	0.65	0.885	0.885	1.069	2.78
1.78	0.78	0.984	0.984	1.153	2.37
1.91	0.91	1.090	1.090	1.244	2.01
2.04	1.04	1.201	1.201	1.342	1.71
2.17	1.17	1.315	1.315	1.445	1.47
2.30	1.30	1.432	1.432	1.552	1.26
2.43	1.43	1.551	1.551	1.663	1.09
2.56	1.56	1.671	1.671	1.776	0.95
2.69	1.69	1.793	1.793	1.891	0.84
2.82	1.82	1.916	1.916	2.008	0.74
2.95	1.95	2.040	2.040	2.127	0.66
3.08	2.08	2.165	2.165	2.246	0.59

INCREMENTO DE ESFUERZO HOLL (1940)

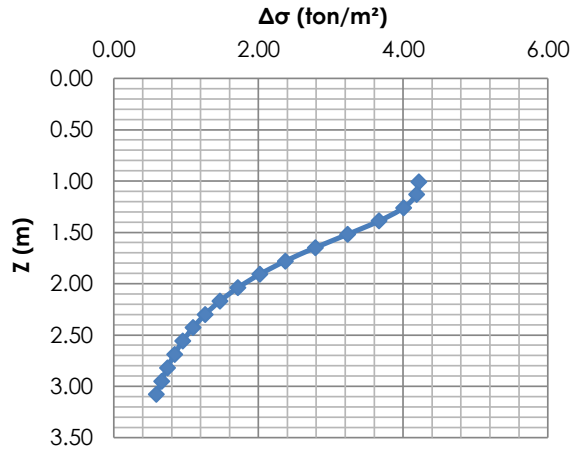

cv (cm²/min)	0.87
U %	0.50
Tv	0.00002
t (días)	0.04
t (años)	0.0001

γw(ton/m^3)	1.00	s'p (ton/m^2) =	2.48	Cr=	0.0357
		eo=	1.08	Cc=	0.1638

Profundidad			Esfuerzos						Asentamientos		
Inicial [m]	Final [m]	Media [m]	γ (ton/m^3)	sv (ton/m^2)	μw (ton/m^2)	s'v (ton/m^2)	Δs'v (ton/m^2)	$s'_v + \Delta s'_v$ (ton/m^2)	Relación de consolidación del suelo (RSC)		Sc (m)
0.00	0.50	0.25	1.73	0.43	0.00	0.43	4.16	4.59	SSC	5.73	0.0170
0.50	1.00	0.75	1.73	1.30	0.00	1.30	3.65	4.95	SSC	1.91	0.0142
1.00	1.50	1.25	1.71	2.14	0.00	2.14	3.41	5.55	SC	1.16	0.0036
1.50	2.00	1.75	1.71	2.99	0.00	2.99	1.82	4.81	SC	0.83	0.0018
2.00	2.50	2.25	1.97	4.43	0.00	4.43	0.84	5.27	SC	0.56	0.0006
2.50	3.00	2.75	1.97	5.42	0.00	5.42	0.66	6.08	SC	0.46	0.0004
										Sc (m)=	0.020629
										Sc (m) 100 años=	0.000103

Asentamientos Inmediatos (Si)

DATOS DE ENTRADA			
Carga Columna (ton)	30.00	Df (m)	1.00
q (ton/m²)	16.46	10% q (ton/m²)	1.65
B (m)	1.35	b (m)	0.68
L (m)	1.35	l (m)	0.68

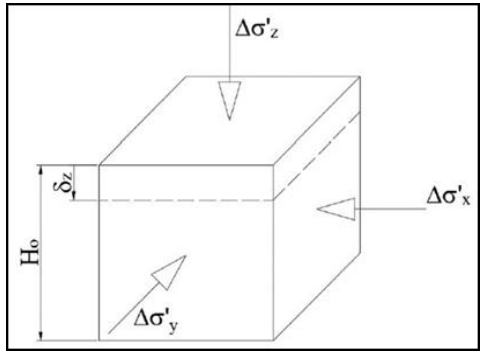

Z (Total)	Z (Relativo)	R_1 (m)	R_2 (m)	R_3 (m)	Δs_z (ton/m²)	Δs_x (ton/m²)
1.01	0.01	0.675	0.675	0.955	16.46	4.033
1.13	0.13	0.687	0.687	0.963	16.38	3.072
1.26	0.26	0.723	0.723	0.989	15.87	2.169
1.39	0.39	0.780	0.780	1.031	14.83	1.478
1.52	0.52	0.852	0.852	1.087	13.40	0.991
1.65	0.65	0.937	0.937	1.155	11.84	0.664
1.78	0.78	1.032	1.032	1.233	10.32	0.450
1.91	0.91	1.133	1.133	1.319	8.94	0.309
2.04	1.04	1.240	1.240	1.412	7.73	0.216
2.17	1.17	1.351	1.351	1.510	6.70	0.154
2.30	1.30	1.465	1.465	1.613	5.83	0.112
2.43	1.43	1.581	1.581	1.719	5.10	0.083
2.56	1.56	1.700	1.700	1.829	4.48	0.062
2.69	1.69	1.820	1.820	1.941	3.96	0.048
2.82	1.82	1.941	1.941	2.055	3.51	0.037
2.95	1.95	2.064	2.064	2.171	3.14	0.029
3.08	2.08	2.187	2.187	2.289	2.82	0.023

$$\Delta\sigma_Z = q_0 \frac{1}{2\pi}\left[\tan^{-1}\frac{\ell \cdot b}{z \cdot R_3} + \frac{\ell \cdot b \cdot z}{R_3}\left(\frac{1}{R_1^{\,2}} + \frac{1}{R_2^{\,2}}\right)\right]$$

$$\delta_z = \varepsilon_z * H_0$$

Dónde:

$\Delta\sigma_Z$ = Incremento de esfuerzo (ton/m²).

q_0 = Carga uniformemente distribuida (ton/m²).

$R_1 = \left(\ell^2 + z^2\right)^{1/2}$

$R_2 = \left(b^2 + z^2\right)^{1/2}$

$R_3 = \left(\ell^2 + b^2 + z^2\right)^{1/2}$

Z = Profundidad (m).

b y ℓ corresponden al ancho (m) y largo de la superficie cargada (m).

Profundidad						Incrementos de Esfuerzos		Asentamientos	
Inicial [m]	Final [m]	Media [m]	Espesor [m]	E (ton/m²)	υ	Δs'v (ton/m²)	Δs'h (ton/m²)	ε	Si (m)
0.00	0.50	0.25	0.50	1016.00	0.50	21.01	3.49	0.017244	0.0086
0.50	1.00	0.75	0.50	1016.00	0.50	14.62	0.77	0.013635	0.0068
1.00	1.50	1.25	0.50	920.00	0.50	8.32	0.18	0.008849	0.00442
1.50	2.00	1.75	0.50	920.00	0.50	4.96	0.06	0.005332	0.00267
2.00	2.50	2.25	0.50	1223.00	0.40	6.73	0.16	0.005398	0.0027
2.50	3.00	2.75	0.50	1223.00	0.40	5.12	0.08	0.004128	0.0021
								Si (m)=	**0.02729**

Asentamientos por Consolidación (Sc)

DATOS DE ENTRADA			
Espesor del Estrato Compresible (m)			100.00
Carga Columna (ton)	30.00	Df (m)	1.00
q (ton/m²)	16.46	10% q (ton/m²)	1.65
B (m)	1.35	b (m)	0.68
L (m)	1.35	l (m)	0.68

Z (Total)	Z (Relativo)	R_1 (m)	R_2 (m)	R_3 (m)	Δs_z (ton/m²)
1.01	0.01	0.675	0.675	0.955	4.12
1.13	0.13	0.687	0.687	0.963	4.09
1.26	0.26	0.723	0.723	0.989	3.97
1.39	0.39	0.780	0.780	1.031	3.71
1.52	0.52	0.852	0.852	1.087	3.35
1.65	0.65	0.937	0.937	1.155	2.96
1.78	0.78	1.032	1.032	1.233	2.58
1.91	0.91	1.133	1.133	1.319	2.23
2.04	1.04	1.240	1.240	1.412	1.93
2.17	1.17	1.351	1.351	1.510	1.68
2.30	1.30	1.465	1.465	1.613	1.46
2.43	1.43	1.581	1.581	1.719	1.27
2.56	1.56	1.700	1.700	1.829	1.12
2.69	1.69	1.820	1.820	1.941	0.99
2.82	1.82	1.941	1.941	2.055	0.88
2.95	1.95	2.064	2.064	2.171	0.78
3.08	2.08	2.187	2.187	2.289	0.70

INCREMENTO DE ESFUERZO HOLL (1940)

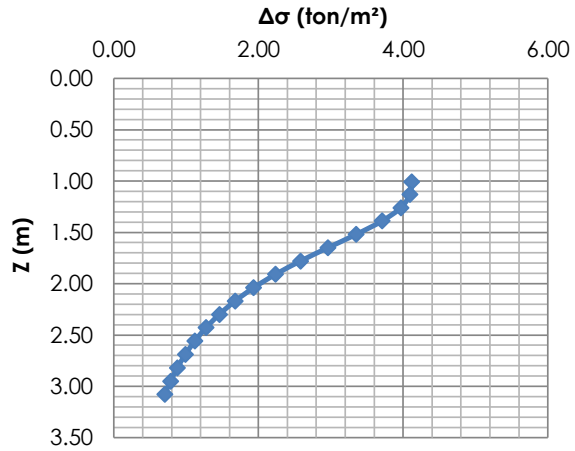

cv (cm²/min)	0.87
U %	0.50
Tv	0.00002
t (días)	0.04
t (años)	0.0001

γw(ton/m^3)	1.00	s'p (ton/m^2) =	2.48	Cr=	0.0357
		eo=	1.08	Cc=	0.1638

Profundidad			Esfuerzos						Asentamientos		
Inicial [m]	Final [m]	Media [m]	γ (ton/m^3)	sv (ton/m^2)	μw (ton/m^2)	s'v (ton/m^2)	Δs'v (ton/m^2)	$s'_v + \Delta s'_v$ (ton/m^2)	Relación de consolidación del suelo (RSC)		Sc (m)
0.00	0.50	0.25	1.73	0.43	0.00	0.43	4.08	4.51	SSC	5.73	0.0167
0.50	1.00	0.75	1.73	1.30	0.00	1.30	3.69	4.99	SSC	1.91	0.0144
1.00	1.50	1.25	1.71	2.14	0.00	2.14	3.66	5.79	SC	1.16	0.0037
1.50	2.00	1.75	1.71	2.99	0.00	2.99	2.08	5.07	SC	0.83	0.0020
2.00	2.50	2.25	1.97	4.43	0.00	4.43	0.99	5.43	SC	0.56	0.0008
2.50	3.00	2.75	1.97	5.42	0.00	5.42	0.79	6.20	SC	0.46	0.0005
										Sc (m)=	0.021314
										Sc (m) 100 años=	0.000107

Asentamientos Inmediatos (Si)

DATOS DE ENTRADA			
Carga Columna (ton)	17.55	Df (m)	1.00
q (ton/m²)	17.55	10% q (ton/r	1.76
B (m)	1.00	b (m)	0.50
L (m)	1.00	l (m)	0.50

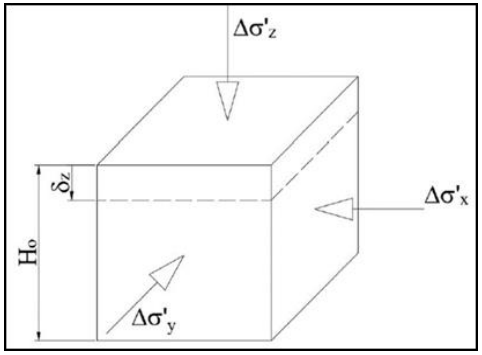

Z (Total)	Z (Relativo)	R_1 (m)	R_2 (m)	R_3 (m)	Δs_z (ton/m²)	Δs_x (ton/m²)
1.01	0.01	0.500	0.500	0.707	17.55	4.270
1.13	0.13	0.517	0.517	0.719	17.34	2.916
1.26	0.26	0.564	0.564	0.753	16.20	1.773
1.39	0.39	0.634	0.634	0.808	14.21	1.036
1.52	0.52	0.721	0.721	0.878	11.96	0.605
1.65	0.65	0.820	0.820	0.960	9.88	0.361
1.78	0.78	0.926	0.926	1.053	8.12	0.223
1.91	0.91	1.038	1.038	1.152	6.71	0.142
2.04	1.04	1.154	1.154	1.258	5.58	0.094
2.17	1.17	1.272	1.272	1.367	4.69	0.064
2.30	1.30	1.393	1.393	1.480	3.97	0.045
2.43	1.43	1.515	1.515	1.595	3.40	0.032
2.56	1.56	1.638	1.638	1.713	2.94	0.024
2.69	1.69	1.762	1.762	1.832	2.56	0.018
2.82	1.82	1.887	1.887	1.953	2.25	0.013
2.95	1.95	2.013	2.013	2.074	1.99	0.010
3.08	2.08	2.139	2.139	2.197	1.77	0.008

$$\Delta\sigma_Z = q_0 \frac{1}{2\pi}\left[\tan^{-1}\frac{\ell \cdot b}{z \cdot R_3} + \frac{\ell \cdot b \cdot z}{R_3}\left(\frac{1}{R_1^{\,2}} + \frac{1}{R_2^{\,2}}\right)\right]$$

$$\delta_z = \varepsilon_z * H_0$$

Dónde:

$\Delta\sigma_Z$ = Incremento de esfuerzo (ton/m²).

q_0 = Carga uniformemente distribuida (ton/m²).

$R_1 = (\ell^2 + z^2)^{1/2}$

$R_2 = (b^2 + z^2)^{1/2}$

$R_3 = (\ell^2 + b^2 + z^2)^{1/2}$

Z = Profundidad (m).

b y ℓ corresponden al ancho (m) y largo de la superficie cargada (m).

Profundidad						Incrementos de Esfuerzos		Asentamientos	
Inicial [m]	Final [m]	Media [m]	Espesor [m]	E (ton/m²)	υ	Δs'v (ton/m²)	Δs'h (ton/m²)	ε	Si (m)
0.00	0.50	0.25	0.50	1016.00	0.50	21.55	3.22	0.018034	0.0090
0.50	1.00	0.75	0.50	1016.00	0.50	11.98	0.42	0.011381	0.0057
1.00	1.50	1.25	0.50	920.00	0.50	5.77	0.08	0.006194	0.00310
1.50	2.00	1.75	0.50	920.00	0.50	3.20	0.02	0.003451	0.00173
2.00	2.50	2.25	0.50	1223.00	0.40	4.72	0.07	0.003814	0.0019
2.50	3.00	2.75	0.50	1223.00	0.40	3.42	0.03	0.002775	0.0014
								Si (m)=	**0.02282**

Asentamientos por Consolidación (Sc)

DATOS DE ENTRADA			
Espesor del Estrato Compresible (m)			100.00
Carga Columna (ton)	17.55	Df (m)	1.00
q (ton/m²)	17.55	10% q (ton/m²)	1.76
B (m)	1.00	b (m)	0.50
L (m)	1.00	l (m)	0.50

Z (Total)	Z (Relativo)	R_1 (m)	R_2 (m)	R_3 (m)	Δs_z (ton/m²)
1.01	0.01	0.500	0.500	0.707	4.39
1.13	0.13	0.517	0.517	0.719	4.34
1.26	0.26	0.564	0.564	0.753	4.05
1.39	0.39	0.634	0.634	0.808	3.55
1.52	0.52	0.721	0.721	0.878	2.99
1.65	0.65	0.820	0.820	0.960	2.47
1.78	0.78	0.926	0.926	1.053	2.03
1.91	0.91	1.038	1.038	1.152	1.68
2.04	1.04	1.154	1.154	1.258	1.40
2.17	1.17	1.272	1.272	1.367	1.17
2.30	1.30	1.393	1.393	1.480	0.99
2.43	1.43	1.515	1.515	1.595	0.85
2.56	1.56	1.638	1.638	1.713	0.73
2.69	1.69	1.762	1.762	1.832	0.64
2.82	1.82	1.887	1.887	1.953	0.56
2.95	1.95	2.013	2.013	2.074	0.50
3.08	2.08	2.139	2.139	2.197	0.44

INCREMENTO DE ESFUERZO HOLL (1940)

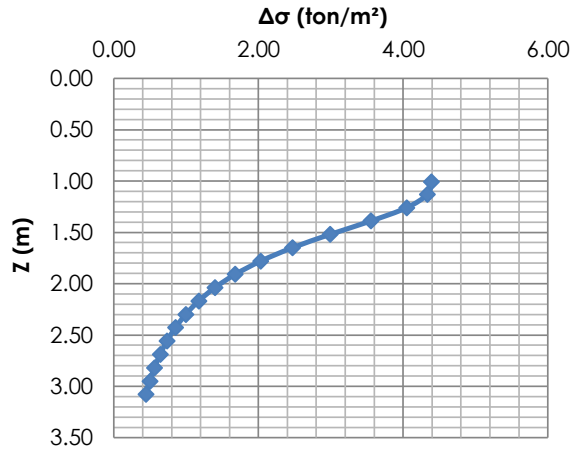

cv (cm²/min)	0.87
U %	0.50
Tv	0.00002
t (días)	0.04
t (años)	0.0001

γw(ton/m^3)	1.00	s'p (ton/m^2) =	2.48	Cr=	0.0357
		eo=	1.08	Cc=	0.1638

Profundidad			Esfuerzos						Asentamientos		
Inicial [m]	Final [m]	Media [m]	γ (ton/m^3)	sv (ton/m^2)	μw (ton/m^2)	s'v (ton/m^2)	Δs'v (ton/m^2)	$s'_v + \Delta s'_v$ (ton/m^2)	Relación de consolidación del suelo (RSC)		Sc (m)
0.00	0.50	0.25	1.73	0.43	0.00	0.43	4.30	4.73	SSC	5.73	0.0176
0.50	1.00	0.75	1.73	1.30	0.00	1.30	3.54	4.84	SSC	1.91	0.0138
1.00	1.50	1.25	1.71	2.14	0.00	2.14	3.00	5.13	SC	1.16	0.0033
1.50	2.00	1.75	1.71	2.99	0.00	2.99	1.44	4.44	SC	0.83	0.0015
2.00	2.50	2.25	1.97	4.43	0.00	4.43	0.64	5.08	SC	0.56	0.0005
2.50	3.00	2.75	1.97	5.42	0.00	5.42	0.50	5.92	SC	0.46	0.0003
										Sc (m)=	0.019415
										Sc (m) 100 años=	0.000097

Asentamientos Inmediatos (Si)

DATOS DE ENTRADA			
Carga Columna (ton)	24.27	Df (m)	1.00
q (ton/m²)	16.85	10% q (ton/r	1.69
B (m)	1.20	b (m)	0.60
L (m)	1.20	l (m)	0.60

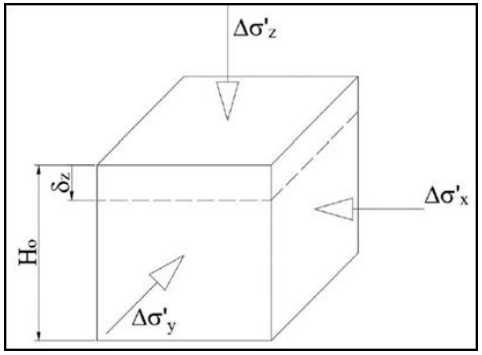

Z (Total)	Z (Relativo)	R_1 (m)	R_2 (m)	R_3 (m)	Δs_z (ton/m²)	Δs_x (ton/m²)
1.01	0.01	0.600	0.600	0.849	16.85	4.118
1.13	0.13	0.614	0.614	0.858	16.73	3.019
1.26	0.26	0.654	0.654	0.887	16.03	2.023
1.39	0.39	0.716	0.716	0.934	14.66	1.303
1.52	0.52	0.794	0.794	0.995	12.92	0.830
1.65	0.65	0.885	0.885	1.069	11.13	0.532
1.78	0.78	0.984	0.984	1.153	9.48	0.347
1.91	0.91	1.090	1.090	1.244	8.06	0.231
2.04	1.04	1.201	1.201	1.342	6.86	0.158
2.17	1.17	1.315	1.315	1.445	5.87	0.110
2.30	1.30	1.432	1.432	1.552	5.05	0.079
2.43	1.43	1.551	1.551	1.663	4.37	0.058
2.56	1.56	1.671	1.671	1.776	3.82	0.043
2.69	1.69	1.793	1.793	1.891	3.35	0.033
2.82	1.82	1.916	1.916	2.008	2.96	0.025
2.95	1.95	2.040	2.040	2.127	2.63	0.020
3.08	2.08	2.165	2.165	2.246	2.35	0.015

$$\Delta\sigma_Z = q_0 \frac{1}{2\pi}\left[\tan^{-1}\frac{\ell \cdot b}{z \cdot R_3} + \frac{\ell \cdot b \cdot z}{R_3}\left(\frac{1}{R_1^{\,2}} + \frac{1}{R_2^{\,2}}\right)\right]$$

$$\delta_z = \varepsilon_z * H_0$$

Dónde:

$\Delta\sigma_Z$ = Incremento de esfuerzo (ton/m²).

q_0 = Carga uniformemente distribuida (ton/m²).

$R_1 = \left(\ell^2 + z^2\right)^{1/2}$

$R_2 = \left(b^2 + z^2\right)^{1/2}$

$R_3 = \left(\ell^2 + b^2 + z^2\right)^{1/2}$

Z = Profundidad (m).

b y ℓ corresponden al ancho (m) y largo de la superficie cargada (m).

Profundidad						Incrementos de Esfuerzos		Asentamientos	
Inicial [m]	Final [m]	Media [m]	Espesor [m]	E (ton/m²)	υ	Δs'v (ton/m²)	Δs'h (ton/m²)	ε	Si (m)
0.00	0.50	0.25	0.50	1016.00	0.50	21.23	3.39	0.017559	0.0088
0.50	1.00	0.75	0.50	1016.00	0.50	13.64	0.62	0.012821	0.0064
1.00	1.50	1.25	0.50	920.00	0.50	7.26	0.13	0.007751	0.00388
1.50	2.00	1.75	0.50	920.00	0.50	4.19	0.04	0.004515	0.00226
2.00	2.50	2.25	0.50	1223.00	0.40	5.90	0.11	0.004747	0.0024
2.50	3.00	2.75	0.50	1223.00	0.40	4.39	0.06	0.003554	0.0018
								Si (m)=	0.02547

Asentamientos por Consolidación (Sc)

DATOS DE ENTRADA			
Espesor del Estrato Compresible (m)			100.00
Carga Columna (ton)	24.27	Df (m)	1.00
q (ton/m²)	16.85	10% q (ton/m²)	1.69
B (m)	1.20	b (m)	0.60
L (m)	1.20	l (m)	0.60

Z (Total)	Z (Relativo)	R_1 (m)	R_2 (m)	R_3 (m)	Δs_z (ton/m²)
1.01	0.01	0.600	0.600	0.849	4.21
1.13	0.13	0.614	0.614	0.858	4.18
1.26	0.26	0.654	0.654	0.887	4.01
1.39	0.39	0.716	0.716	0.934	3.67
1.52	0.52	0.794	0.794	0.995	3.23
1.65	0.65	0.885	0.885	1.069	2.78
1.78	0.78	0.984	0.984	1.153	2.37
1.91	0.91	1.090	1.090	1.244	2.01
2.04	1.04	1.201	1.201	1.342	1.71
2.17	1.17	1.315	1.315	1.445	1.47
2.30	1.30	1.432	1.432	1.552	1.26
2.43	1.43	1.551	1.551	1.663	1.09
2.56	1.56	1.671	1.671	1.776	0.95
2.69	1.69	1.793	1.793	1.891	0.84
2.82	1.82	1.916	1.916	2.008	0.74
2.95	1.95	2.040	2.040	2.127	0.66
3.08	2.08	2.165	2.165	2.246	0.59

INCREMENTO DE ESFUERZO HOLL (1940)

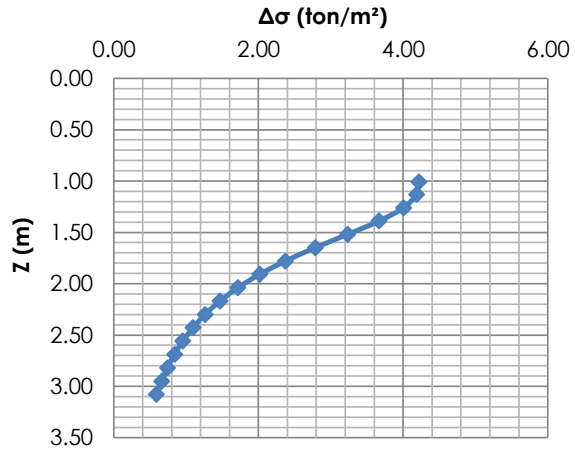

cv (cm²/min)	0.87
U %	0.50
Tv	0.00002
t (días)	0.04
t (años)	0.0001

γw(ton/m^3)	1.00	s'p (ton/m^2) =	2.48	Cr=	0.0357
		eo=	1.08	Cc=	0.1638

Profundidad			Esfuerzos						Asentamientos		
Inicial [m]	Final [m]	Media [m]	γ (ton/m^3)	sv (ton/m^2)	μw (ton/m^2)	s'v (ton/m^2)	Δs'v (ton/m^2)	$s'_v + \Delta s'_v$ (ton/m^2)	Relación de consolidación del suelo (RSC)		Sc (m)
0.00	0.50	0.25	1.73	0.43	0.00	0.43	4.16	4.59	SSC	5.73	0.0170
0.50	1.00	0.75	1.73	1.30	0.00	1.30	3.65	4.95	SSC	1.91	0.0142
1.00	1.50	1.25	1.71	2.14	0.00	2.14	3.41	5.55	SC	1.16	0.0036
1.50	2.00	1.75	1.71	2.99	0.00	2.99	1.82	4.81	SC	0.83	0.0018
2.00	2.50	2.25	1.97	4.43	0.00	4.43	0.84	5.27	SC	0.56	0.0006
2.50	3.00	2.75	1.97	5.42	0.00	5.42	0.66	6.08	SC	0.46	0.0004
										Sc (m)=	0.020629
										Sc (m) 100 años=	0.000103

SERVICIO

Asentamientos Inmediatos (Si)

DATOS DE ENTRADA			
Carga Columna (ton)	17.55	Df (m)	1.00
q (ton/m²)	17.55	10% q (ton/r	1.76
B (m)	1.00	b (m)	0.50
L (m)	1.00	l (m)	0.50

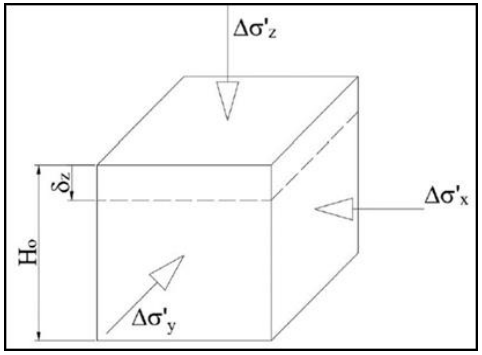

Z (Total)	Z (Relativo)	R_1 (m)	R_2 (m)	R_3 (m)	Δs_z (ton/m²)	Δs_x (ton/m²)
1.01	0.01	0.500	0.500	0.707	17.55	4.270
1.13	0.13	0.517	0.517	0.719	17.34	2.916
1.26	0.26	0.564	0.564	0.753	16.20	1.773
1.39	0.39	0.634	0.634	0.808	14.21	1.036
1.52	0.52	0.721	0.721	0.878	11.96	0.605
1.65	0.65	0.820	0.820	0.960	9.88	0.361
1.78	0.78	0.926	0.926	1.053	8.12	0.223
1.91	0.91	1.038	1.038	1.152	6.71	0.142
2.04	1.04	1.154	1.154	1.258	5.58	0.094
2.17	1.17	1.272	1.272	1.367	4.69	0.064
2.30	1.30	1.393	1.393	1.480	3.97	0.045
2.43	1.43	1.515	1.515	1.595	3.40	0.032
2.56	1.56	1.638	1.638	1.713	2.94	0.024
2.69	1.69	1.762	1.762	1.832	2.56	0.018
2.82	1.82	1.887	1.887	1.953	2.25	0.013
2.95	1.95	2.013	2.013	2.074	1.99	0.010
3.08	2.08	2.139	2.139	2.197	1.77	0.008

$$\Delta\sigma_Z = q_0 \frac{1}{2\pi}\left[\tan^{-1}\frac{\ell \cdot b}{z \cdot R_3} + \frac{\ell \cdot b \cdot z}{R_3}\left(\frac{1}{R_1^{\,2}} + \frac{1}{R_2^{\,2}}\right)\right]$$

$$\delta_z = \varepsilon_z * H_0$$

Dónde:

$\Delta\sigma_Z$ = Incremento de esfuerzo (ton/m²).

q_0 = Carga uniformemente distribuida (ton/m²).

$R_1 = (\ell^2 + z^2)^{1/2}$

$R_2 = (b^2 + z^2)^{1/2}$

$R_3 = (\ell^2 + b^2 + z^2)^{1/2}$

Z = Profundidad (m).

b y ℓ corresponden al ancho (m) y largo de la superficie cargada (m).

Profundidad						Incrementos de Esfuerzos		Asentamientos	
Inicial [m]	Final [m]	Media [m]	Espesor [m]	E (ton/m²)	υ	Δs'v (ton/m²)	Δs'h (ton/m²)	ε	Si (m)
0.00	0.50	0.25	0.50	1016.00	0.50	21.55	3.22	0.018034	0.0090
0.50	1.00	0.75	0.50	1016.00	0.50	11.98	0.42	0.011381	0.0057
1.00	1.50	1.25	0.50	920.00	0.50	5.77	0.08	0.006194	0.00310
1.50	2.00	1.75	0.50	920.00	0.50	3.20	0.02	0.003451	0.00173
2.00	2.50	2.25	0.50	1223.00	0.40	4.72	0.07	0.003814	0.0019
2.50	3.00	2.75	0.50	1223.00	0.40	3.42	0.03	0.002775	0.0014
								Si (m)=	0.02282

Asentamientos por Consolidación (Sc)

DATOS DE ENTRADA			
Espesor del Estrato Compresible (m)			100.00
Carga Columna (ton)	17.55	Df (m)	1.00
q (ton/m²)	17.55	10% q (ton/m²)	1.76
B (m)	1.00	b (m)	0.50
L (m)	1.00	l (m)	0.50

Z (Total)	Z (Relativo)	R_1 (m)	R_2 (m)	R_3 (m)	Δs_z (ton/m²)
1.01	0.01	0.500	0.500	0.707	4.39
1.13	0.13	0.517	0.517	0.719	4.34
1.26	0.26	0.564	0.564	0.753	4.05
1.39	0.39	0.634	0.634	0.808	3.55
1.52	0.52	0.721	0.721	0.878	2.99
1.65	0.65	0.820	0.820	0.960	2.47
1.78	0.78	0.926	0.926	1.053	2.03
1.91	0.91	1.038	1.038	1.152	1.68
2.04	1.04	1.154	1.154	1.258	1.40
2.17	1.17	1.272	1.272	1.367	1.17
2.30	1.30	1.393	1.393	1.480	0.99
2.43	1.43	1.515	1.515	1.595	0.85
2.56	1.56	1.638	1.638	1.713	0.73
2.69	1.69	1.762	1.762	1.832	0.64
2.82	1.82	1.887	1.887	1.953	0.56
2.95	1.95	2.013	2.013	2.074	0.50
3.08	2.08	2.139	2.139	2.197	0.44

INCREMENTO DE ESFUERZO HOLL (1940)

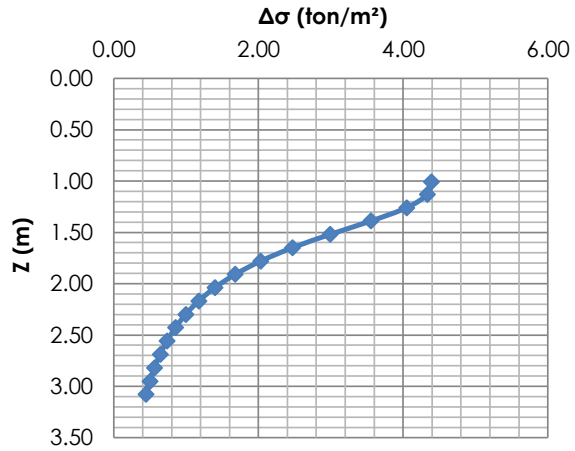

cv (cm²/min)	0.87
U %	0.50
Tv	0.00002
t (días)	0.04
t (años)	0.0001

γw(ton/m^3)	1.00	s'p (ton/m^2) =	2.48	Cr=	0.0357
		eo=	1.08	Cc=	0.1638

Profundidad			Esfuerzos						Asentamientos		
Inicial [m]	Final [m]	Media [m]	γ (ton/m^3)	sv (ton/m^2)	μw (ton/m^2)	s'v (ton/m^2)	Δs'v (ton/m^2)	$s'_v + \Delta s'_v$ (ton/m^2)	Relación de consolidación del suelo (RSC)		Sc (m)
0.00	0.50	0.25	1.73	0.43	0.00	0.43	4.30	4.73	SSC	5.73	0.0176
0.50	1.00	0.75	1.73	1.30	0.00	1.30	3.54	4.84	SSC	1.91	0.0138
1.00	1.50	1.25	1.71	2.14	0.00	2.14	3.00	5.13	SC	1.16	0.0033
1.50	2.00	1.75	1.71	2.99	0.00	2.99	1.44	4.44	SC	0.83	0.0015
2.00	2.50	2.25	1.97	4.43	0.00	4.43	0.64	5.08	SC	0.56	0.0005
2.50	3.00	2.75	1.97	5.42	0.00	5.42	0.50	5.92	SC	0.46	0.0003
										Sc (m)=	0.019415
										Sc (m) 100 años=	0.000097

CARGAS REALES

Asentamientos Inmediatos (Si)

DATOS DE ENTRADA			
Carga Columna (ton)	25.98	**Df (m)**	1.00
q (ton/m²)	15.37	**10% q (ton/m²)**	1.54
B (m)	1.30	**b (m)**	0.65
L (m)	1.30	**l (m)**	0.65

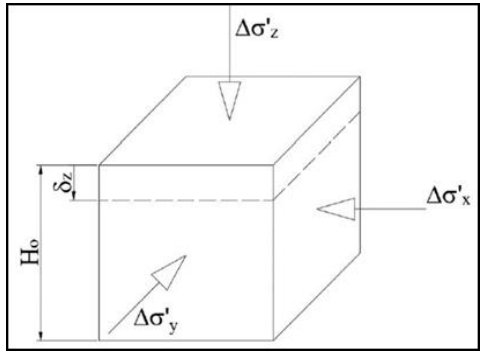

$$\Delta\sigma_Z = q_0 \frac{1}{2\pi}\left[\tan^{-1}\frac{\ell \cdot b}{z \cdot R_3} + \frac{\ell \cdot b \cdot z}{R_3}\left(\frac{1}{R_1^{\,2}} + \frac{1}{R_2^{\,2}}\right)\right]$$

$$\delta_z = \varepsilon_z * H_0$$

Dónde:

$\Delta\sigma_Z$ = Incremento de esfuerzo (ton/m²).

q_0 = Carga uniformemente distribuida (ton/m²).

$R_1 = \left(\ell^2 + z^2\right)^{1/2}$

$R_2 = \left(b^2 + z^2\right)^{1/2}$

$R_3 = \left(\ell^2 + b^2 + z^2\right)^{1/2}$

Z = Profundidad (m).

b y ℓ corresponden al ancho (m) y largo de la superficie cargada (m).

Z (Total)	Z (Relativo)	R_1 (m)	R_2 (m)	R_3 (m)	Δs_z (ton/m²)	Δs_x (ton/m²)
1.01	0.01	0.650	0.650	0.919	15.37	3.764
1.13	0.13	0.663	0.663	0.928	15.29	2.833
1.26	0.26	0.700	0.700	0.955	14.77	1.969
1.39	0.39	0.758	0.758	0.999	13.71	1.319
1.52	0.52	0.832	0.832	1.056	12.30	0.870
1.65	0.65	0.919	0.919	1.126	10.78	0.575
1.78	0.78	1.015	1.015	1.206	9.32	0.384
1.91	0.91	1.118	1.118	1.293	8.03	0.262
2.04	1.04	1.226	1.226	1.388	6.91	0.182
2.17	1.17	1.338	1.338	1.488	5.96	0.129
2.30	1.30	1.453	1.453	1.592	5.17	0.093
2.43	1.43	1.571	1.571	1.700	4.50	0.069
2.56	1.56	1.690	1.690	1.811	3.95	0.051
2.69	1.69	1.811	1.811	1.924	3.48	0.039
2.82	1.82	1.933	1.933	2.039	3.09	0.030
2.95	1.95	2.055	2.055	2.156	2.75	0.024
3.08	2.08	2.179	2.179	2.274	2.46	0.019

Profundidad						Incrementos de Esfuerzos		Asentamientos	
Inicial [m]	Final [m]	Media [m]	Espesor [m]	E (ton/m²)	υ	Δs'v (ton/m²)	Δs'h (ton/m²)	ε	Si (m)
0.00	0.50	0.25	0.50	1016.00	0.50	19.55	3.21	0.016082	0.0080
0.50	1.00	0.75	0.50	1016.00	0.50	13.28	0.67	0.012411	0.0062
1.00	1.50	1.25	0.50	920.00	0.50	7.40	0.15	0.007873	0.00394
1.50	2.00	1.75	0.50	920.00	0.50	4.36	0.05	0.004691	0.00235
2.00	2.50	2.25	0.50	1223.00	0.40	5.99	0.13	0.004809	0.0024
2.50	3.00	2.75	0.50	1223.00	0.40	4.52	0.07	0.003652	0.0018
								Si (m)=	**0.02476**

Asentamientos por Consolidación (Sc)

DATOS DE ENTRADA			
Espesor del Estrato Compresible (m)			100.00
Carga Columna (ton)	25.98	Df (m)	1.00
q (ton/m²)	15.37	10% q (ton/m²)	1.54
B (m)	1.30	b (m)	0.65
L (m)	1.30	l (m)	0.65

Z (Total)	Z (Relativo)	R_1 (m)	R_2 (m)	R_3 (m)	Δs_z (ton/m²)
1.01	0.01	0.650	0.650	0.919	3.84
1.13	0.13	0.663	0.663	0.928	3.82
1.26	0.26	0.700	0.700	0.955	3.69
1.39	0.39	0.758	0.758	0.999	3.43
1.52	0.52	0.832	0.832	1.056	3.07
1.65	0.65	0.919	0.919	1.126	2.69
1.78	0.78	1.015	1.015	1.206	2.33
1.91	0.91	1.118	1.118	1.293	2.01
2.04	1.04	1.226	1.226	1.388	1.73
2.17	1.17	1.338	1.338	1.488	1.49
2.30	1.30	1.453	1.453	1.592	1.29
2.43	1.43	1.571	1.571	1.700	1.13
2.56	1.56	1.690	1.690	1.811	0.99
2.69	1.69	1.811	1.811	1.924	0.87
2.82	1.82	1.933	1.933	2.039	0.77
2.95	1.95	2.055	2.055	2.156	0.69
3.08	2.08	2.179	2.179	2.274	0.62

INCREMENTO DE ESFUERZO HOLL (1940)

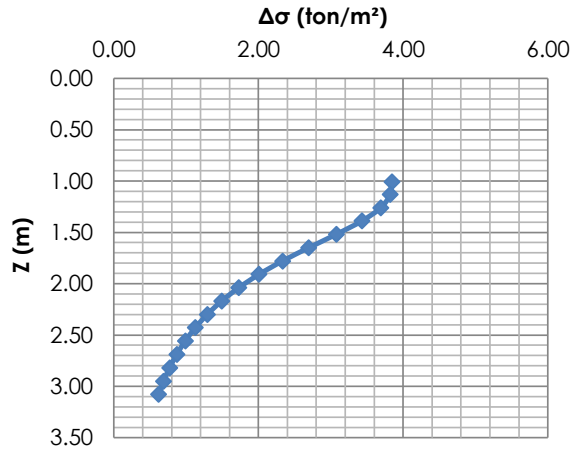

cv (cm²/min)	0.87
U %	0.50
Tv	0.00002
t (días)	0.04
t (años)	0.0001

γw(ton/m^3)	1.00	s'p (ton/m^2) =	2.48	Cr=	0.0357
		eo=	1.08	Cc=	0.1638

Profundidad			Esfuerzos						Asentamientos		
Inicial [m]	Final [m]	Media [m]	γ (ton/m^3)	sv (ton/m^2)	μw (ton/m^2)	s'v (ton/m^2)	Δs'v (ton/m^2)	$s'_v + \Delta s'_v$ (ton/m^2)	Relación de consolidación del suelo (RSC)		Sc (m)
0.00	0.50	0.25	1.73	0.43	0.00	0.43	3.80	4.24	SSC	5.73	0.0157
0.50	1.00	0.75	1.73	1.30	0.00	1.30	3.41	4.71	SSC	1.91	0.0134
1.00	1.50	1.25	1.71	2.14	0.00	2.14	3.32	5.46	SC	1.16	0.0035
1.50	2.00	1.75	1.71	2.99	0.00	2.99	1.85	4.84	SC	0.83	0.0018
2.00	2.50	2.25	1.97	4.43	0.00	4.43	0.87	5.31	SC	0.56	0.0007
2.50	3.00	2.75	1.97	5.42	0.00	5.42	0.69	6.11	SC	0.46	0.0004
										Sc (m)=	0.019791
										Sc (m) 100 años=	0.000099

Asentamientos Inmediatos (Si)

DATOS DE ENTRADA			
Carga Columna (ton)	8.08	Df (m)	1.00
q (ton/m²)	6.68	10% q (ton/m²)	0.67
B (m)	1.10	b (m)	0.55
L (m)	1.10	l (m)	0.55

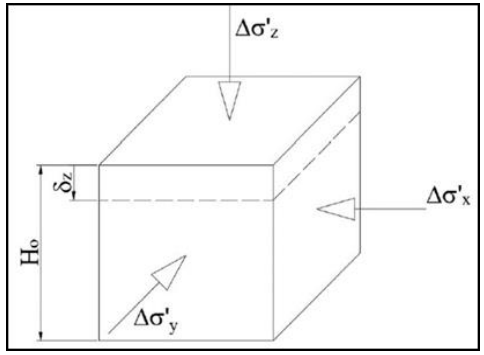

$$\Delta\sigma_Z = q_0 \frac{1}{2\pi}\left[\tan^{-1}\frac{\ell \cdot b}{z \cdot R_3} + \frac{\ell \cdot b \cdot z}{R_3}\left(\frac{1}{R_1^{\,2}} + \frac{1}{R_2^{\,2}}\right)\right]$$

$$\delta_z = \varepsilon_z * H_0$$

Dónde:

$\Delta\sigma_Z$ = Incremento de esfuerzo (ton/m²).

q_0 = Carga uniformemente distribuida (ton/m²).

$R_1 = (\ell^2 + z^2)^{1/2}$

$R_2 = (b^2 + z^2)^{1/2}$

$R_3 = (\ell^2 + b^2 + z^2)^{1/2}$

Z = Profundidad (m).

b y ℓ corresponden al ancho (m) y largo de la superficie cargada (m).

Z (Total)	Z (Relativo)	R_1 (m)	R_2 (m)	R_3 (m)	Δs_z (ton/m²)	Δs_x (ton/m²)
1.01	0.01	0.550	0.550	0.778	6.68	1.628
1.13	0.13	0.565	0.565	0.789	6.61	1.156
1.26	0.26	0.608	0.608	0.820	6.27	0.741
1.39	0.39	0.674	0.674	0.870	5.63	0.457
1.52	0.52	0.757	0.757	0.936	4.86	0.279
1.65	0.65	0.851	0.851	1.014	4.10	0.173
1.78	0.78	0.954	0.954	1.102	3.44	0.110
1.91	0.91	1.063	1.063	1.197	2.88	0.072
2.04	1.04	1.176	1.176	1.299	2.42	0.048
2.17	1.17	1.293	1.293	1.405	2.05	0.033
2.30	1.30	1.412	1.412	1.515	1.75	0.024
2.43	1.43	1.532	1.532	1.628	1.51	0.017
2.56	1.56	1.654	1.654	1.743	1.31	0.013
2.69	1.69	1.777	1.777	1.860	1.15	0.009
2.82	1.82	1.901	1.901	1.979	1.01	0.007
2.95	1.95	2.026	2.026	2.099	0.90	0.006
3.08	2.08	2.151	2.151	2.221	0.80	0.004

Profundidad						Incrementos de Esfuerzos		Asentamientos	
Inicial [m]	Final [m]	Media [m]	Espesor [m]	E (ton/m²)	υ	Δs'v (ton/m²)	Δs'h (ton/m²)	ε	Si (m)
0.00	0.50	0.25	0.50	1016.00	0.50	8.31	1.29	0.006916	0.0035
0.50	1.00	0.75	0.50	1016.00	0.50	5.00	0.20	0.004726	0.0024
1.00	1.50	1.25	0.50	920.00	0.50	2.54	0.04	0.002715	0.00136
1.50	2.00	1.75	0.50	920.00	0.50	1.43	0.01	0.001546	0.00077
2.00	2.50	2.25	0.50	1223.00	0.40	2.07	0.03	0.001667	0.0008
2.50	3.00	2.75	0.50	1223.00	0.40	1.52	0.02	0.001230	0.0006
								Si (m)=	**0.00940**

Asentamientos por Consolidación (Sc)

DATOS DE ENTRADA			
Espesor del Estrato Compresible (m)			100.00
Carga Columna (ton)	8.08	Df (m)	1.00
q (ton/m²)	6.68	10% q (ton/m²)	0.67
B (m)	1.10	b (m)	0.55
L (m)	1.10	l (m)	0.55

Z (Total)	Z (Relativo)	R_1 (m)	R_2 (m)	R_3 (m)	Δs_z (ton/m²)
1.01	0.01	0.550	0.550	0.778	1.67
1.13	0.13	0.565	0.565	0.789	1.65
1.26	0.26	0.608	0.608	0.820	1.57
1.39	0.39	0.674	0.674	0.870	1.41
1.52	0.52	0.757	0.757	0.936	1.21
1.65	0.65	0.851	0.851	1.014	1.03
1.78	0.78	0.954	0.954	1.102	0.86
1.91	0.91	1.063	1.063	1.197	0.72
2.04	1.04	1.176	1.176	1.299	0.61
2.17	1.17	1.293	1.293	1.405	0.51
2.30	1.30	1.412	1.412	1.515	0.44
2.43	1.43	1.532	1.532	1.628	0.38
2.56	1.56	1.654	1.654	1.743	0.33
2.69	1.69	1.777	1.777	1.860	0.29
2.82	1.82	1.901	1.901	1.979	0.25
2.95	1.95	2.026	2.026	2.099	0.22
3.08	2.08	2.151	2.151	2.221	0.20

INCREMENTO DE ESFUERZO HOLL (1940)

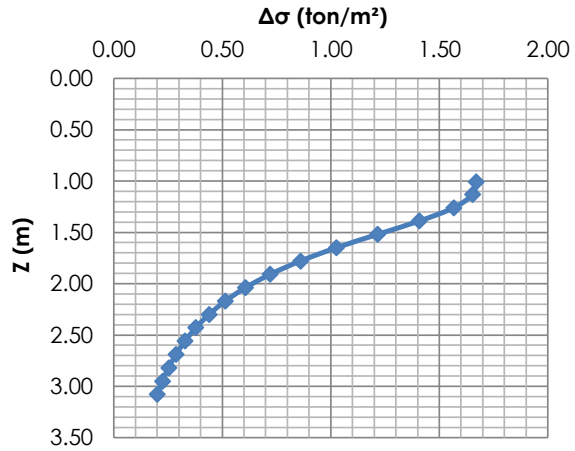

cv (cm²/min)	0.87
U %	0.50
Tv	0.00002
t (días)	0.04
t (años)	0.0001

γw(ton/m³)	1.00	s'p (ton/m²) =	2.48	Cr=	0.0357
		eo=	1.08	Cc=	0.1638

Profundidad			Esfuerzos						Asentamientos		
Inicial [m]	Final [m]	Media [m]	γ (ton/m³)	sv (ton/m²)	μw (ton/m²)	s'v (ton/m²)	Δs'v (ton/m²)	$s'_v + \Delta s'_v$ (ton/m²)	Relación de consolidación del suelo (RSC)		Sc (m)
0.00	0.50	0.25	1.73	0.43	0.00	0.43	1.64	2.07	SSC	5.73	0.0035
0.50	1.00	0.75	1.73	1.30	0.00	1.30	1.40	2.70	SSC	1.91	0.0039
1.00	1.50	1.25	1.71	2.14	0.00	2.14	1.25	3.39	SC	1.16	0.0017
1.50	2.00	1.75	1.71	2.99	0.00	2.99	0.63	3.63	SC	0.83	0.0007
2.00	2.50	2.25	1.97	4.43	0.00	4.43	0.29	4.72	SC	0.56	0.0002
2.50	3.00	2.75	1.97	5.42	0.00	5.42	0.22	5.64	SC	0.46	0.0002
										Sc (m)=	0.006685
										Sc (m) 100 años=	0.000033

Asentamientos Inmediatos (Si)

DATOS DE ENTRADA			
Carga Columna (ton)	14.999	**Df (m)**	1.00
q (ton/m²)	10.42	**10% q (ton/m²)**	1.04
B (m)	1.20	**b (m)**	0.60
L (m)	1.20	**l (m)**	0.60

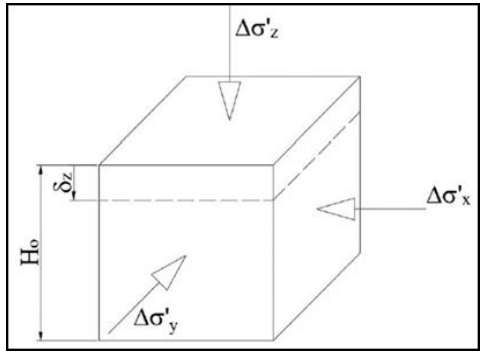

Z (Total)	Z (Relativo)	R_1 (m)	R_2 (m)	R_3 (m)	Δs_z (ton/m²)	Δs_x (ton/m²)
1.01	0.01	0.600	0.600	0.849	10.42	2.545
1.13	0.13	0.614	0.614	0.858	10.34	1.866
1.26	0.26	0.654	0.654	0.887	9.91	1.250
1.39	0.39	0.716	0.716	0.934	9.06	0.806
1.52	0.52	0.794	0.794	0.995	7.99	0.513
1.65	0.65	0.885	0.885	1.069	6.88	0.329
1.78	0.78	0.984	0.984	1.153	5.86	0.214
1.91	0.91	1.090	1.090	1.244	4.98	0.143
2.04	1.04	1.201	1.201	1.342	4.24	0.098
2.17	1.17	1.315	1.315	1.445	3.63	0.068
2.30	1.30	1.432	1.432	1.552	3.12	0.049
2.43	1.43	1.551	1.551	1.663	2.70	0.036
2.56	1.56	1.671	1.671	1.776	2.36	0.027
2.69	1.69	1.793	1.793	1.891	2.07	0.020
2.82	1.82	1.916	1.916	2.008	1.83	0.015
2.95	1.95	2.040	2.040	2.127	1.63	0.012
3.08	2.08	2.165	2.165	2.246	1.45	0.010

$$\Delta\sigma_Z = q_0 \frac{1}{2\pi}\left[\tan^{-1}\frac{\ell \cdot b}{z \cdot R_3} + \frac{\ell \cdot b \cdot z}{R_3}\left(\frac{1}{R_1^{\,2}} + \frac{1}{R_2^{\,2}}\right)\right]$$

$$\delta_z = \varepsilon_z * H_0$$

Dónde:

$\Delta\sigma_Z$ = Incremento de esfuerzo (ton/m²).

q_0 = Carga uniformemente distribuida (ton/m²).

$R_1 = \left(\ell^2 + z^2\right)^{1/2}$

$R_2 = \left(b^2 + z^2\right)^{1/2}$

$R_3 = \left(\ell^2 + b^2 + z^2\right)^{1/2}$

Z = Profundidad (m).

b y ℓ corresponden al ancho (m) y largo de la superficie cargada (m).

Profundidad						Incrementos de Esfuerzos		Asentamientos	
Inicial [m]	Final [m]	Media [m]	Espesor [m]	E (ton/m²)	υ	Δs'v (ton/m²)	Δs'h (ton/m²)	ε	Si (m)
0.00	0.50	0.25	0.50	1016.00	0.50	13.12	2.10	0.010853	0.0054
0.50	1.00	0.75	0.50	1016.00	0.50	8.43	0.38	0.007925	0.0040
1.00	1.50	1.25	0.50	920.00	0.50	4.49	0.08	0.004791	0.00240
1.50	2.00	1.75	0.50	920.00	0.50	2.59	0.02	0.002791	0.00140
2.00	2.50	2.25	0.50	1223.00	0.40	3.64	0.07	0.002934	0.0015
2.50	3.00	2.75	0.50	1223.00	0.40	2.72	0.04	0.002197	0.0011
								Si (m)=	**0.01575**

Asentamientos por Consolidación (Sc)

DATOS DE ENTRADA			
Espesor del Estrato Compresible (m)			100.00
Carga Columna (ton)	14.999	Df (m)	1.00
q (ton/m²)	10.42	10% q (ton/m²)	1.04
B (m)	1.20	b (m)	0.60
L (m)	1.20	l (m)	0.60

Z (Total)	Z (Relativo)	R_1 (m)	R_2 (m)	R_3 (m)	Δs_z (ton/m²)
1.01	0.01	0.600	0.600	0.849	2.60
1.13	0.13	0.614	0.614	0.858	2.59
1.26	0.26	0.654	0.654	0.887	2.48
1.39	0.39	0.716	0.716	0.934	2.27
1.52	0.52	0.794	0.794	0.995	2.00
1.65	0.65	0.885	0.885	1.069	1.72
1.78	0.78	0.984	0.984	1.153	1.47
1.91	0.91	1.090	1.090	1.244	1.25
2.04	1.04	1.201	1.201	1.342	1.06
2.17	1.17	1.315	1.315	1.445	0.91
2.30	1.30	1.432	1.432	1.552	0.78
2.43	1.43	1.551	1.551	1.663	0.68
2.56	1.56	1.671	1.671	1.776	0.59
2.69	1.69	1.793	1.793	1.891	0.52
2.82	1.82	1.916	1.916	2.008	0.46
2.95	1.95	2.040	2.040	2.127	0.41
3.08	2.08	2.165	2.165	2.246	0.36

INCREMENTO DE ESFUERZO HOLL (1940)

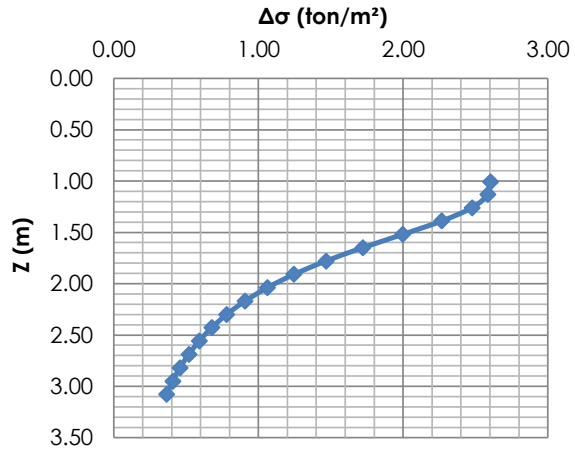

cv (cm²/min)	0.87
U %	0.50
Tv	0.00002
t (días)	0.04
t (años)	0.0001

γw(ton/m^3)	1.00	s'p (ton/m^2) =	2.48	Cr=	0.0357
		eo=	1.08	Cc=	0.1638

Profundidad			Esfuerzos						Asentamientos		
Inicial [m]	Final [m]	Media [m]	γ (ton/m^3)	sv (ton/m^2)	μw (ton/m^2)	s'v (ton/m^2)	Δs'v (ton/m^2)	$s'_v + \Delta s'_v$ (ton/m^2)	Relación de consolidación del suelo (RSC)		Sc (m)
0.00	0.50	0.25	1.73	0.43	0.00	0.43	2.57	3.00	SSC	5.73	0.0098
0.50	1.00	0.75	1.73	1.30	0.00	1.30	2.26	3.55	SSC	1.91	0.0086
1.00	1.50	1.25	1.71	2.14	0.00	2.14	2.11	4.25	SC	1.16	0.0026
1.50	2.00	1.75	1.71	2.99	0.00	2.99	1.12	4.11	SC	0.83	0.0012
2.00	2.50	2.25	1.97	4.43	0.00	4.43	0.52	4.95	SC	0.56	0.0004
2.50	3.00	2.75	1.97	5.42	0.00	5.42	0.41	5.83	SC	0.46	0.0003
										Sc (m)=	0.012998
										Sc (m) 100 años=	0.000065

Asentamientos Inmediatos (Si)

DATOS DE ENTRADA			
Carga Columna (ton)	21.49	Df (m)	1.00
q (ton/m²)	11.79	10% q (ton/m²)	1.18
B (m)	1.35	b (m)	0.68
L (m)	1.35	l (m)	0.68

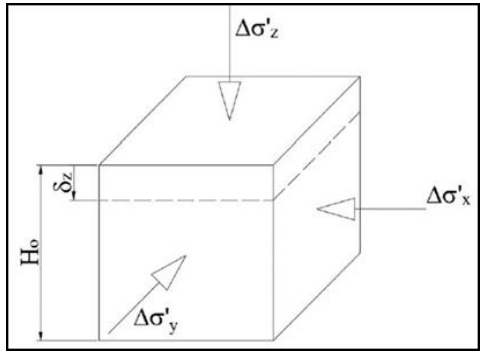

Z (Total)	Z (Relativo)	R_1 (m)	R_2 (m)	R_3 (m)	Δs_z (ton/m²)	Δs_x (ton/m²)
1.01	0.01	0.675	0.675	0.955	11.79	2.889
1.13	0.13	0.687	0.687	0.963	11.73	2.200
1.26	0.26	0.723	0.723	0.989	11.37	1.554
1.39	0.39	0.780	0.780	1.031	10.62	1.059
1.52	0.52	0.852	0.852	1.087	9.60	0.710
1.65	0.65	0.937	0.937	1.155	8.48	0.476
1.78	0.78	1.032	1.032	1.233	7.39	0.322
1.91	0.91	1.133	1.133	1.319	6.40	0.221
2.04	1.04	1.240	1.240	1.412	5.54	0.155
2.17	1.17	1.351	1.351	1.510	4.80	0.111
2.30	1.30	1.465	1.465	1.613	4.18	0.080
2.43	1.43	1.581	1.581	1.719	3.65	0.059
2.56	1.56	1.700	1.700	1.829	3.21	0.045
2.69	1.69	1.820	1.820	1.941	2.83	0.034
2.82	1.82	1.941	1.941	2.055	2.52	0.027
2.95	1.95	2.064	2.064	2.171	2.25	0.021
3.08	2.08	2.187	2.187	2.289	2.02	0.017

$$\Delta\sigma_Z = q_0 \frac{1}{2\pi}\left[\tan^{-1}\frac{\ell \cdot b}{z \cdot R_3} + \frac{\ell \cdot b \cdot z}{R_3}\left(\frac{1}{R_1^{\,2}} + \frac{1}{R_2^{\,2}}\right)\right]$$

$$\delta_z = \varepsilon_z * H_0$$

Dónde:

$\Delta\sigma_Z$ = Incremento de esfuerzo (ton/m²).

q_0 = Carga uniformemente distribuida (ton/m²).

$R_1 = \left(\ell^2 + z^2\right)^{1/2}$

$R_2 = \left(b^2 + z^2\right)^{1/2}$

$R_3 = \left(\ell^2 + b^2 + z^2\right)^{1/2}$

Z = Profundidad (m).

b y ℓ corresponden al ancho (m) y largo de la superficie cargada (m).

Profundidad						Incrementos de Esfuerzos		Asentamientos	
Inicial [m]	Final [m]	Media [m]	Espesor [m]	E (ton/m²)	υ	Δs'v (ton/m²)	Δs'h (ton/m²)	ε	Si (m)
0.00	0.50	0.25	0.50	1016.00	0.50	15.05	2.50	0.012352	0.0062
0.50	1.00	0.75	0.50	1016.00	0.50	10.47	0.55	0.009767	0.0049
1.00	1.50	1.25	0.50	920.00	0.50	5.96	0.13	0.006339	0.00317
1.50	2.00	1.75	0.50	920.00	0.50	3.55	0.04	0.003820	0.00191
2.00	2.50	2.25	0.50	1223.00	0.40	4.82	0.11	0.003866	0.0019
2.50	3.00	2.75	0.50	1223.00	0.40	3.66	0.06	0.002957	0.0015
								Si (m)=	**0.01955**

Asentamientos por Consolidación (Sc)

DATOS DE ENTRADA			
Espesor del Estrato Compresible (m)			100.00
Carga Columna (ton)	21.49	Df (m)	1.00
q (ton/m²)	11.79	10% q (ton/m²)	1.18
B (m)	1.35	b (m)	0.68
L (m)	1.35	l (m)	0.68

Z (Total)	Z (Relativo)	R_1 (m)	R_2 (m)	R_3 (m)	Δs_z (ton/m²)
1.01	0.01	0.675	0.675	0.955	2.95
1.13	0.13	0.687	0.687	0.963	2.93
1.26	0.26	0.723	0.723	0.989	2.84
1.39	0.39	0.780	0.780	1.031	2.66
1.52	0.52	0.852	0.852	1.087	2.40
1.65	0.65	0.937	0.937	1.155	2.12
1.78	0.78	1.032	1.032	1.233	1.85
1.91	0.91	1.133	1.133	1.319	1.60
2.04	1.04	1.240	1.240	1.412	1.38
2.17	1.17	1.351	1.351	1.510	1.20
2.30	1.30	1.465	1.465	1.613	1.04
2.43	1.43	1.581	1.581	1.719	0.91
2.56	1.56	1.700	1.700	1.829	0.80
2.69	1.69	1.820	1.820	1.941	0.71
2.82	1.82	1.941	1.941	2.055	0.63
2.95	1.95	2.064	2.064	2.171	0.56
3.08	2.08	2.187	2.187	2.289	0.50

INCREMENTO DE ESFUERZO HOLL (1940)

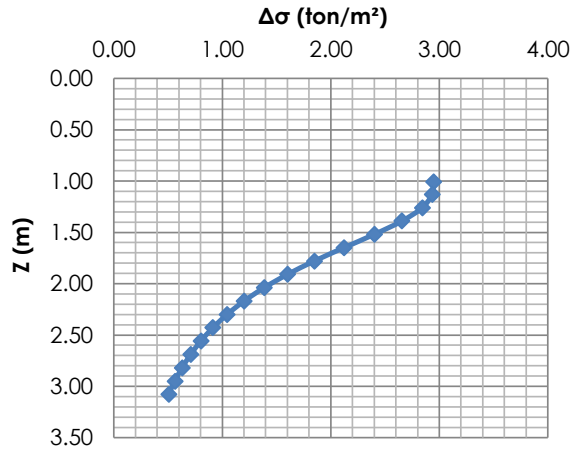

cv (cm²/min)	0.87
U %	0.50
Tv	0.00002
t (días)	0.04
t (años)	0.0001

γw(ton/m³)	1.00	s'p (ton/m²) =	2.48	Cr=	0.0357
		eo=	1.08	Cc=	0.1638

Profundidad			Esfuerzos						Asentamientos		
Inicial [m]	Final [m]	Media [m]	γ (ton/m³)	sv (ton/m²)	μw (ton/m²)	s'v (ton/m²)	Δs'v (ton/m²)	$s'_v + \Delta s'_v$ (ton/m²)	Relación de consolidación del suelo (RSC)		Sc (m)
0.00	0.50	0.25	1.73	0.43	0.00	0.43	2.92	3.35	SSC	5.73	0.0117
0.50	1.00	0.75	1.73	1.30	0.00	1.30	2.64	3.94	SSC	1.91	0.0103
1.00	1.50	1.25	1.71	2.14	0.00	2.14	2.62	4.76	SC	1.16	0.0030
1.50	2.00	1.75	1.71	2.99	0.00	2.99	1.49	4.48	SC	0.83	0.0015
2.00	2.50	2.25	1.97	4.43	0.00	4.43	0.71	5.14	SC	0.56	0.0006
2.50	3.00	2.75	1.97	5.42	0.00	5.42	0.56	5.98	SC	0.46	0.0004
										Sc (m)=	0.015753
										Sc (m) 100 años=	0.000079

Asentamientos Inmediatos (Si)

DATOS DE ENTRADA			
Carga Columna (ton)	10.998	Df (m)	1.00
q (ton/m²)	10.998	10% q (ton/r	1.10
B (m)	1.00	b (m)	0.50
L (m)	1.00	l (m)	0.50

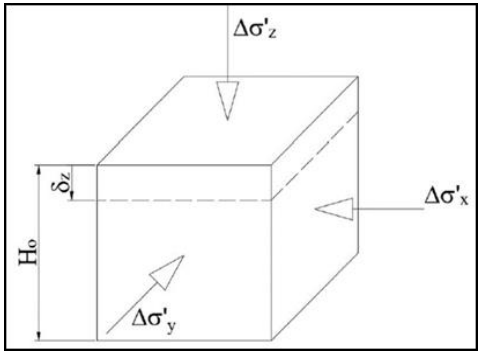

Z (Total)	Z (Relativo)	R_1 (m)	R_2 (m)	R_3 (m)	Δs_z (ton/m²)	Δs_x (ton/m²)
1.01	0.01	0.500	0.500	0.707	11.00	2.675
1.13	0.13	0.517	0.517	0.719	10.86	1.827
1.26	0.26	0.564	0.564	0.753	10.15	1.111
1.39	0.39	0.634	0.634	0.808	8.90	0.649
1.52	0.52	0.721	0.721	0.878	7.49	0.379
1.65	0.65	0.820	0.820	0.960	6.19	0.226
1.78	0.78	0.926	0.926	1.053	5.09	0.140
1.91	0.91	1.038	1.038	1.152	4.20	0.089
2.04	1.04	1.154	1.154	1.258	3.50	0.059
2.17	1.17	1.272	1.272	1.367	2.94	0.040
2.30	1.30	1.393	1.393	1.480	2.49	0.028
2.43	1.43	1.515	1.515	1.595	2.13	0.020
2.56	1.56	1.638	1.638	1.713	1.84	0.015
2.69	1.69	1.762	1.762	1.832	1.60	0.011
2.82	1.82	1.887	1.887	1.953	1.41	0.008
2.95	1.95	2.013	2.013	2.074	1.24	0.007
3.08	2.08	2.139	2.139	2.197	1.11	0.005

$$\Delta\sigma_Z = q_0 \frac{1}{2\pi}\left[\tan^{-1}\frac{\ell\cdot b}{z\cdot R_3} + \frac{\ell\cdot b\cdot z}{R_3}\left(\frac{1}{R_1^{\,2}} + \frac{1}{R_2^{\,2}}\right)\right]$$

$$\delta_z = \varepsilon_z * H_0$$

Dónde:

$\Delta\sigma_Z$ = Incremento de esfuerzo (ton/m²).

q_0 = Carga uniformemente distribuida (ton/m²).

$R_1 = \left(\ell^2 + z^2\right)^{1/2}$

$R_2 = \left(b^2 + z^2\right)^{1/2}$

$R_3 = \left(\ell^2 + b^2 + z^2\right)^{1/2}$

Z = Profundidad (m).

b y ℓ corresponden al ancho (m) y largo de la superficie cargada (m).

Profundidad						Incrementos de Esfuerzos		Asentamientos	
Inicial [m]	Final [m]	Media [m]	Espesor [m]	E (ton/m²)	υ	Δs'v (ton/m²)	Δs'h (ton/m²)	ε	Si (m)
0.00	0.50	0.25	0.50	1016.00	0.50	13.50	2.02	0.011299	0.0056
0.50	1.00	0.75	0.50	1016.00	0.50	7.51	0.26	0.007131	0.0036
1.00	1.50	1.25	0.50	920.00	0.50	3.62	0.05	0.003881	0.00194
1.50	2.00	1.75	0.50	920.00	0.50	2.00	0.01	0.002162	0.00108
2.00	2.50	2.25	0.50	1223.00	0.40	2.96	0.04	0.002389	0.0012
2.50	3.00	2.75	0.50	1223.00	0.40	2.14	0.02	0.001739	0.0009
								Si (m)=	0.01430

Asentamientos por Consolidación (Sc)

DATOS DE ENTRADA			
Espesor del Estrato Compresible (m)			100.00
Carga Columna (ton)	10.998	Df (m)	1.00
q (ton/m²)	10.998	10% q (ton/m²)	1.10
B (m)	1.00	b (m)	0.50
L (m)	1.00	l (m)	0.50

Z (Total)	Z (Relativo)	R_1 (m)	R_2 (m)	R_3 (m)	Δs_z (ton/m²)
1.01	0.01	0.500	0.500	0.707	2.75
1.13	0.13	0.517	0.517	0.719	2.72
1.26	0.26	0.564	0.564	0.753	2.54
1.39	0.39	0.634	0.634	0.808	2.23
1.52	0.52	0.721	0.721	0.878	1.87
1.65	0.65	0.820	0.820	0.960	1.55
1.78	0.78	0.926	0.926	1.053	1.27
1.91	0.91	1.038	1.038	1.152	1.05
2.04	1.04	1.154	1.154	1.258	0.87
2.17	1.17	1.272	1.272	1.367	0.73
2.30	1.30	1.393	1.393	1.480	0.62
2.43	1.43	1.515	1.515	1.595	0.53
2.56	1.56	1.638	1.638	1.713	0.46
2.69	1.69	1.762	1.762	1.832	0.40
2.82	1.82	1.887	1.887	1.953	0.35
2.95	1.95	2.013	2.013	2.074	0.31
3.08	2.08	2.139	2.139	2.197	0.28

INCREMENTO DE ESFUERZO HOLL (1940)

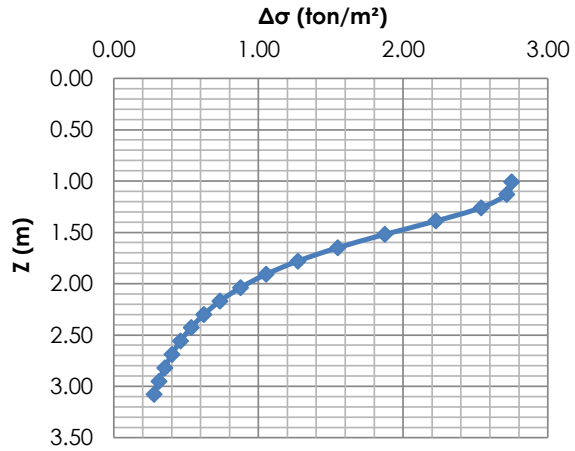

cv (cm²/min)	0.87
U %	0.50
Tv	0.00002
t (días)	0.04
t (años)	0.0001

γw(ton/m^3)	1.00	s'p (ton/m^2) =	2.48	Cr=	0.0357
		eo=	1.08	Cc=	0.1638

Profundidad			Esfuerzos						Asentamientos		
Inicial [m]	Final [m]	Media [m]	γ (ton/m^3)	sv (ton/m^2)	μw (ton/m^2)	s'v (ton/m^2)	Δs'v (ton/m^2)	$s'_v + \Delta s'_v$ (ton/m^2)	Relación de consolidación del suelo (RSC)		Sc (m)
0.00	0.50	0.25	1.73	0.43	0.00	0.43	2.69	3.12	SSC	5.73	0.0105
0.50	1.00	0.75	1.73	1.30	0.00	1.30	2.22	3.52	SSC	1.91	0.0084
1.00	1.50	1.25	1.71	2.14	0.00	2.14	1.88	4.01	SC	1.16	0.0024
1.50	2.00	1.75	1.71	2.99	0.00	2.99	0.90	3.90	SC	0.83	0.0010
2.00	2.50	2.25	1.97	4.43	0.00	4.43	0.40	4.84	SC	0.56	0.0003
2.50	3.00	2.75	1.97	5.42	0.00	5.42	0.31	5.73	SC	0.46	0.0002
										Sc (m)=	0.012255
										Sc (m) 100 años=	0.000061

Asentamientos Inmediatos (Si)

DATOS DE ENTRADA			
Carga Columna (ton)	16.20	Df (m)	1.00
q (ton/m²)	11.25	10% q (ton/r	1.12
B (m)	1.20	b (m)	0.60
L (m)	1.20	l (m)	0.60

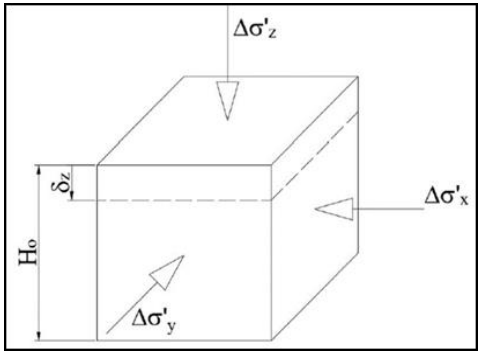

$$\Delta\sigma_Z = q_0 \frac{1}{2\pi}\left[\tan^{-1}\frac{\ell \cdot b}{z \cdot R_3} + \frac{\ell \cdot b \cdot z}{R_3}\left(\frac{1}{R_1^{\,2}} + \frac{1}{R_2^{\,2}}\right)\right]$$

$$\delta_z = \varepsilon_z * H_0$$

Dónde:

$\Delta\sigma_Z$ = Incremento de esfuerzo (ton/m²).

q_0 = Carga uniformemente distribuida (ton/m²).

$R_1 = (\ell^2 + z^2)^{1/2}$

$R_2 = (b^2 + z^2)^{1/2}$

$R_3 = (\ell^2 + b^2 + z^2)^{1/2}$

Z = Profundidad (m).

b y ℓ corresponden al ancho (m) y largo de la superficie cargada (m).

Z (Total)	Z (Relativo)	R_1 (m)	R_2 (m)	R_3 (m)	Δs_z (ton/m²)	Δs_x (ton/m²)
1.01	0.01	0.600	0.600	0.849	11.25	2.748
1.13	0.13	0.614	0.614	0.858	11.17	2.015
1.26	0.26	0.654	0.654	0.887	10.70	1.350
1.39	0.39	0.716	0.716	0.934	9.79	0.870
1.52	0.52	0.794	0.794	0.995	8.62	0.554
1.65	0.65	0.885	0.885	1.069	7.43	0.355
1.78	0.78	0.984	0.984	1.153	6.33	0.231
1.91	0.91	1.090	1.090	1.244	5.38	0.154
2.04	1.04	1.201	1.201	1.342	4.58	0.105
2.17	1.17	1.315	1.315	1.445	3.92	0.074
2.30	1.30	1.432	1.432	1.552	3.37	0.053
2.43	1.43	1.551	1.551	1.663	2.92	0.039
2.56	1.56	1.671	1.671	1.776	2.55	0.029
2.69	1.69	1.793	1.793	1.891	2.24	0.022
2.82	1.82	1.916	1.916	2.008	1.98	0.017
2.95	1.95	2.040	2.040	2.127	1.76	0.013
3.08	2.08	2.165	2.165	2.246	1.57	0.010

Profundidad						Incrementos de Esfuerzos		Asentamientos	
Inicial [m]	Final [m]	Media [m]	Espesor [m]	E (ton/m²)	υ	Δs'v (ton/m²)	Δs'h (ton/m²)	ε	Si (m)
0.00	0.50	0.25	0.50	1016.00	0.50	14.17	2.26	0.011719	0.0059
0.50	1.00	0.75	0.50	1016.00	0.50	9.10	0.41	0.008557	0.0043
1.00	1.50	1.25	0.50	920.00	0.50	4.85	0.09	0.005173	0.00259
1.50	2.00	1.75	0.50	920.00	0.50	2.80	0.03	0.003013	0.00151
2.00	2.50	2.25	0.50	1223.00	0.40	3.93	0.08	0.003168	0.0016
2.50	3.00	2.75	0.50	1223.00	0.40	2.93	0.04	0.002372	0.0012
								Si (m)=	**0.01700**

Asentamientos por Consolidación (Sc)

DATOS DE ENTRADA			
Espesor del Estrato Compresible (m)			100.00
Carga Columna (ton)	16.20	Df (m)	1.00
q (ton/m²)	11.25	10% q (ton/m²)	1.12
B (m)	1.20	b (m)	0.60
L (m)	1.20	l (m)	0.60

Z (Total)	Z (Relativo)	R_1 (m)	R_2 (m)	R_3 (m)	Δs_z (ton/m²)
1.01	0.01	0.600	0.600	0.849	2.81
1.13	0.13	0.614	0.614	0.858	2.79
1.26	0.26	0.654	0.654	0.887	2.67
1.39	0.39	0.716	0.716	0.934	2.45
1.52	0.52	0.794	0.794	0.995	2.16
1.65	0.65	0.885	0.885	1.069	1.86
1.78	0.78	0.984	0.984	1.153	1.58
1.91	0.91	1.090	1.090	1.244	1.34
2.04	1.04	1.201	1.201	1.342	1.14
2.17	1.17	1.315	1.315	1.445	0.98
2.30	1.30	1.432	1.432	1.552	0.84
2.43	1.43	1.551	1.551	1.663	0.73
2.56	1.56	1.671	1.671	1.776	0.64
2.69	1.69	1.793	1.793	1.891	0.56
2.82	1.82	1.916	1.916	2.008	0.49
2.95	1.95	2.040	2.040	2.127	0.44
3.08	2.08	2.165	2.165	2.246	0.39

INCREMENTO DE ESFUERZO HOLL (1940)

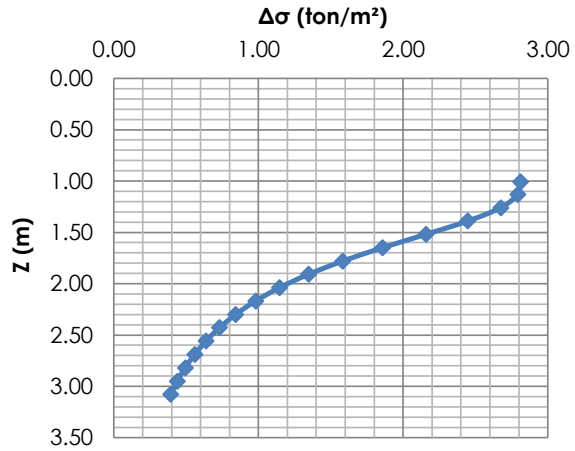

cv (cm²/min)	0.87
U %	0.50
Tv	0.00002
t (días)	0.04
t (años)	0.0001

γw(ton/m^3)	1.00	s'p (ton/m^2) =	2.48	Cr=	0.0357
		eo=	1.08	Cc=	0.1638

Profundidad			Esfuerzos						Asentamientos		
Inicial [m]	Final [m]	Media [m]	γ (ton/m^3)	sv (ton/m^2)	μw (ton/m^2)	s'v (ton/m^2)	Δs'v (ton/m^2)	$s'_v + \Delta s'_v$ (ton/m^2)	Relación de consolidación del suelo (RSC)		Sc (m)
0.00	0.50	0.25	1.73	0.43	0.00	0.43	2.78	3.21	SSC	5.73	0.0109
0.50	1.00	0.75	1.73	1.30	0.00	1.30	2.44	3.73	SSC	1.91	0.0094
1.00	1.50	1.25	1.71	2.14	0.00	2.14	2.28	4.41	SC	1.16	0.0027
1.50	2.00	1.75	1.71	2.99	0.00	2.99	1.21	4.20	SC	0.83	0.0013
2.00	2.50	2.25	1.97	4.43	0.00	4.43	0.56	4.99	SC	0.56	0.0004
2.50	3.00	2.75	1.97	5.42	0.00	5.42	0.44	5.86	SC	0.46	0.0003
										Sc (m)=	0.014119
										Sc (m) 100 años=	0.000071

SERVICIO

Asentamientos Inmediatos (Si)

DATOS DE ENTRADA			
Carga Columna (ton)	10.18	Df (m)	1.00
q (ton/m²)	10.18	10% q (ton/r	1.02
B (m)	1.00	b (m)	0.50
L (m)	1.00	l (m)	0.50

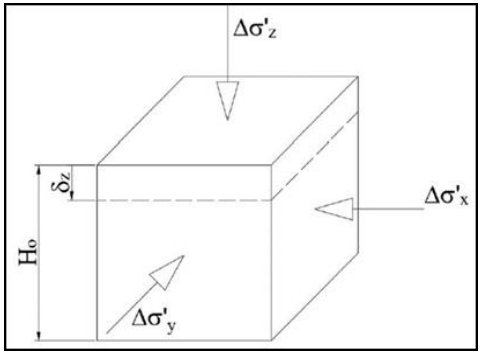

$$\Delta\sigma_Z = q_0 \frac{1}{2\pi}\left[\tan^{-1}\frac{\ell \cdot b}{z \cdot R_3} + \frac{\ell \cdot b \cdot z}{R_3}\left(\frac{1}{R_1^{\,2}} + \frac{1}{R_2^{\,2}}\right)\right]$$

$$\delta_z = \varepsilon_z * H_0$$

Dónde:
$\Delta\sigma_Z$ = Incremento de esfuerzo (ton/m²).
q_0 = Carga uniformemente distribuida (ton/m²).
$R_1 = (\ell^2 + z^2)^{1/2}$
$R_2 = (b^2 + z^2)^{1/2}$
$R_3 = (\ell^2 + b^2 + z^2)^{1/2}$
Z = Profundidad (m).
b y ℓ corresponden al ancho (m) y largo de la superficie cargada (m).

Z (Total)	Z (Relativo)	R_1 (m)	R_2 (m)	R_3 (m)	Δs_z (ton/m²)	Δs_x (ton/m²)
1.01	0.01	0.500	0.500	0.707	10.18	2.477
1.13	0.13	0.517	0.517	0.719	10.06	1.692
1.26	0.26	0.564	0.564	0.753	9.40	1.028
1.39	0.39	0.634	0.634	0.808	8.24	0.601
1.52	0.52	0.721	0.721	0.878	6.94	0.351
1.65	0.65	0.820	0.820	0.960	5.73	0.210
1.78	0.78	0.926	0.926	1.053	4.71	0.129
1.91	0.91	1.038	1.038	1.152	3.89	0.083
2.04	1.04	1.154	1.154	1.258	3.24	0.054
2.17	1.17	1.272	1.272	1.367	2.72	0.037
2.30	1.30	1.393	1.393	1.480	2.31	0.026
2.43	1.43	1.515	1.515	1.595	1.97	0.019
2.56	1.56	1.638	1.638	1.713	1.71	0.014
2.69	1.69	1.762	1.762	1.832	1.49	0.010
2.82	1.82	1.887	1.887	1.953	1.30	0.008
2.95	1.95	2.013	2.013	2.074	1.15	0.006
3.08	2.08	2.139	2.139	2.197	1.02	0.005

Profundidad						Incrementos de Esfuerzos		Asentamientos	
Inicial [m]	Final [m]	Media [m]	Espesor [m]	E (ton/m²)	υ	Δs'v (ton/m²)	Δs'h (ton/m²)	ε	Si (m)
0.00	0.50	0.25	0.50	1016.00	0.50	12.50	1.87	0.010463	0.0052
0.50	1.00	0.75	0.50	1016.00	0.50	6.95	0.24	0.006603	0.0033
1.00	1.50	1.25	0.50	920.00	0.50	3.35	0.04	0.003594	0.00180
1.50	2.00	1.75	0.50	920.00	0.50	1.85	0.01	0.002002	0.00100
2.00	2.50	2.25	0.50	1223.00	0.40	2.74	0.04	0.002213	0.0011
2.50	3.00	2.75	0.50	1223.00	0.40	1.98	0.02	0.001610	0.0008
								Si (m)=	**0.01324**

Asentamientos por Consolidación (Sc)

DATOS DE ENTRADA			
Espesor del Estrato Compresible (m)			100.00
Carga Columna (ton)	10.18	Df (m)	1.00
q (ton/m²)	10.18	10% q (ton/m²)	1.02
B (m)	1.00	b (m)	0.50
L (m)	1.00	l (m)	0.50

Z (Total)	Z (Relativo)	R_1 (m)	R_2 (m)	R_3 (m)	Δs_z (ton/m²)
1.01	0.01	0.500	0.500	0.707	2.55
1.13	0.13	0.517	0.517	0.719	2.52
1.26	0.26	0.564	0.564	0.753	2.35
1.39	0.39	0.634	0.634	0.808	2.06
1.52	0.52	0.721	0.721	0.878	1.73
1.65	0.65	0.820	0.820	0.960	1.43
1.78	0.78	0.926	0.926	1.053	1.18
1.91	0.91	1.038	1.038	1.152	0.97
2.04	1.04	1.154	1.154	1.258	0.81
2.17	1.17	1.272	1.272	1.367	0.68
2.30	1.30	1.393	1.393	1.480	0.58
2.43	1.43	1.515	1.515	1.595	0.49
2.56	1.56	1.638	1.638	1.713	0.43
2.69	1.69	1.762	1.762	1.832	0.37
2.82	1.82	1.887	1.887	1.953	0.33
2.95	1.95	2.013	2.013	2.074	0.29
3.08	2.08	2.139	2.139	2.197	0.26

INCREMENTO DE ESFUERZO HOLL (1940)

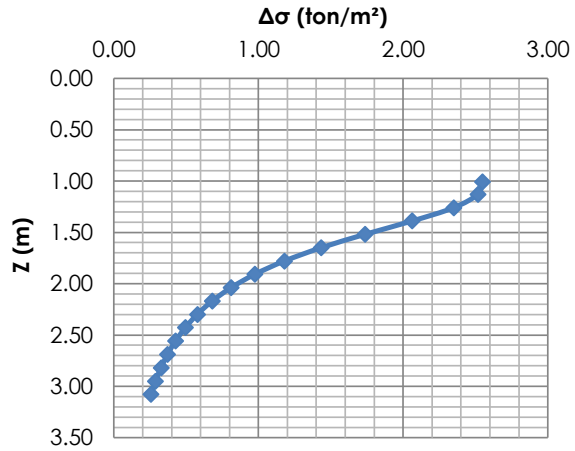

cv (cm²/min)	0.87
U %	0.50
Tv	0.00002
t (días)	0.04
t (años)	0.0001

γw(ton/m^3)	1.00	s'p (ton/m^2) =	2.48	Cr=	0.0357
		eo=	1.08	Cc=	0.1638

Profundidad			Esfuerzos						Asentamientos		
Inicial [m]	Final [m]	Media [m]	γ (ton/m^3)	sv (ton/m^2)	μw (ton/m^2)	s'v (ton/m^2)	Δs'v (ton/m^2)	$s'_v + \Delta s'_v$ (ton/m^2)	Relación de consolidación del suelo (RSC)		Sc (m)
0.00	0.50	0.25	1.73	0.43	0.00	0.43	2.49	2.93	SSC	5.73	0.0093
0.50	1.00	0.75	1.73	1.30	0.00	1.30	2.05	3.35	SSC	1.91	0.0076
1.00	1.50	1.25	1.71	2.14	0.00	2.14	1.74	3.88	SC	1.16	0.0022
1.50	2.00	1.75	1.71	2.99	0.00	2.99	0.84	3.83	SC	0.83	0.0009
2.00	2.50	2.25	1.97	4.43	0.00	4.43	0.37	4.81	SC	0.56	0.0003
2.50	3.00	2.75	1.97	5.42	0.00	5.42	0.29	5.71	SC	0.46	0.0002
										Sc (m)=	0.011203
										Sc (m) 100 años=	0.000056